DocuSign Envelope ID: EE90BE65-8B93-4608-A14E-CA8373CDD3BF

09/08/99

PROJECT: 17BP.6.R.73

CONTRACT: DF00249

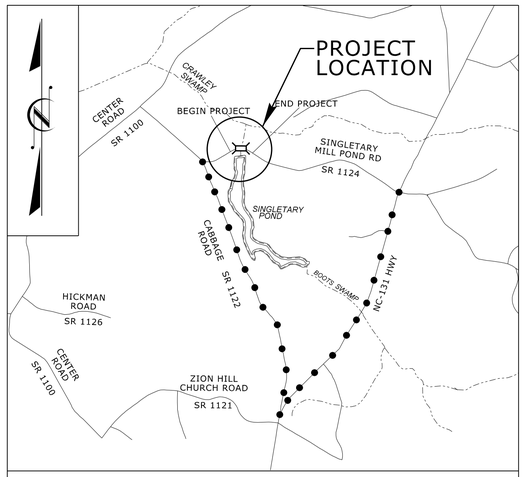

VICINITY MAP

OFF-SITE DETOUR

STATE OF NORTH CAROLINA
DIVISION OF HIGHWAYS

BLADEN COUNTY

LOCATION: BRIDGE NO. 080175 SINGLETARY MILL POND ROAD (SR 1124) OVER BOOTS SWAMP

TYPE OF WORK: WIDENING, GRADING, PAVING, DRAINAGE, AND STRUCTURE

STATE	STATE PROJECT REFERENCE NO.	SHEET NO.	TOTAL SHEETS
N.C.	17BP.6.R.73	1	

W.B.S. NO.	F.A. PROJ. NO.	DESCRIPTION
17BP.6.R.73		PE
17BP.6.R.73		R/W, UTIL.
17BP.6.R.73		CONSTR.

FINAL PLANS

NAD 83 / NA 2011

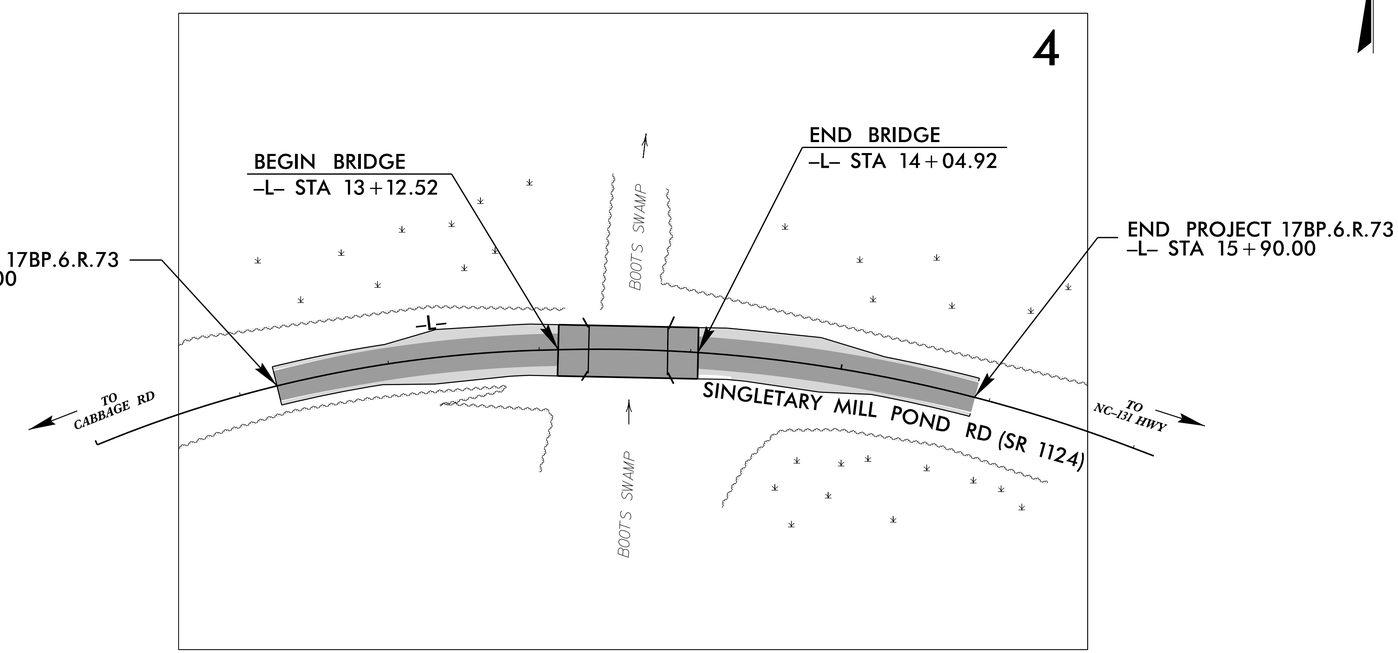

DOCUMENT NOT CONSIDERED FINAL UNLESS ALL SIGNATURES COMPLETED

GRAPHIC SCALES

20 10 0 20 40
PLANS

20 10 0 20 40
PROFILE (HORIZONTAL)

4 2 0 4 8
PROFILE (VERTICAL)

DESIGN DATA

ADT 2016 = 420
TTST = 3%
DUALS = 3%
V = 55 MPH

FUNC CLASS = RURAL LOCAL

SUB-REGIONAL TIER GUIDELINES

PROJECT LENGTH

LENGTH ROADWAY PROJECT 17BP.6.R.73	=	0.071 MILES
LENGTH STRUCTURES PROJECT 17BP.6.R.73	=	0.017 MILES
TOTAL LENGTH PROJECT 17BP.6.R.73	=	0.088 MILES

Prepared in the Office of:

ATKINS *1616 E. MILLBROOK ROAD, SUITE #160 RALEIGH, NORTH CAROLINA 27609 (919) 876-6888 NCBEES #F-0326*

2012 STANDARD SPECIFICATIONS

RIGHT OF WAY DATE:
JULY 27, 2018

LETTING DATE:
FEBRUARY 2, 2022

BRUCE PAYNE, P.E.
PROJECT ENGINEER

DANA PACZEK, PE
PROJECT DESIGN ENGINEER

CHRISTY WRIGHT HUFF, P.E.
NCDOT CONTACT

HYDRAULICS ENGINEER

NORTH CAROLINA PROFESSIONAL SEAL 014455 ENGINEER

DocuSigned by:
SIGNATURE: 11/8/2021 *P.E.*

ROADWAY DESIGN ENGINEER

NORTH CAROLINA PROFESSIONAL SEAL 022610 ENGINEER

DocuSigned by:
SIGNATURE: 11/8/2021 *P.E.*

DIVISION OF HIGHWAYS STATE OF NORTH CAROLINA

STATE OF NORTH CAROLINA DEPARTMENT OF TRANSPORTATION

P.E.
STATE HIGHWAY DESIGN ENGINEER

08-NOV-2021 10:28
R:\Roadway\Proj\17BP.6.R.73_rdy_tsh.dgn
$$$$USERNAME$$$$

DocuSign Envelope ID: EE90BE65-8B93-4608-A14E-CA8373CDD3BF

8/17/99

PROJECT REFERENCE NO.	SHEET NO.
17BP.6.R.73	1A

ROADWAY DESIGN ENGINEER

NORTH CAROLINA PROFESSIONAL SEAL 022610 ENGINEER BRUCE B. PAYNE JR.

DocuSigned by: Bruce Payne 11/8/2021
02BA45C2B69A485...

DOCUMENT NOT CONSIDERED FINAL UNLESS ALL SIGNATURES COMPLETED

INDEX OF SHEETS

SHEET NUMBER	SHEET
1	TITLE SHEET
1A	INDEX OF SHEETS, GENERAL NOTES, AND STANDARD DRAWINGS
1B	CONVENTIONAL SYMBOLS
1C-1	SURVEY CONTROL SHEET
1D-1	ALIGNMENT CONTROL SHEET
1E-1	RIGHT OF WAY CONTROL SHEET
2A-1	PAVEMENT SCHEDULE, TYPICAL SECTIONS, WEDGING DETAIL, AND MILLING DETAIL
2C-1	MODIFIED CONCRETE FLUME DETAIL
3B-1	SUMMARY OF GUARDRAIL, EARTHWORK SUMMARY, ASPHALT PAVEMENT REMOVAL SUMMARY SHOULDER BERM GUTTER SUMMARY, AND DRAINAGE SUMMARY
4 THRU 5	PLAN AND PROFILE SHEET
TMP-1 THRU TMP-3	TRAFFIC MANAGEMENT PLANS
PMP-1 THRU PMP-2	PAVEMENT MARKING PLANS
EC-1 THRU EC-4	EROSION CONTROL PLANS
UO-1 THRU UO-2	UTILITIES BY OTHERS PLANS
X-1A THRU X-1B	CROSS-SECTION SUMMARY SHEET
X-1 THRU X-8	CROSS-SECTIONS
S-1 THRU S-17	STRUCTURE PLANS

GENERAL NOTES:

2018 SPECIFICATIONS
EFFECTIVE: 01-16-2018
REVISED:

GRADING AND SURFACING OR RESURFACING AND WIDENING:

THE GRADE LINES SHOWN DENOTE THE FINISHED ELEVATION OF THE PROPOSED SURFACING AT GRADE POINTS SHOWN ON THE TYPICAL SECTIONS. WHERE NO GRADE LINES ARE SHOWN, THE PROFILES SHOWN DENOTE THE TOP ELEVATION OF THE EXISTING PAVEMENT ALONG THE CENTER LINE OF SURVEY ON WHICH THE PROPOSED RESURFACING WILL BE PLACED. GRADE LINES MAY BE ADJUSTED BY THE ENGINEER IN ORDER TO SECURE A PROPER TIE-IN.

CLEARING:

CLEARING ON THIS PROJECT SHALL BE PERFORMED TO THE LIMITS ESTABLISHED BY METHOD II.

SUPERELEVATION:

ALL CURVES ON THIS PROJECT SHALL BE SUPERELEVATED IN ACCORDANCE WITH STD. NO. 225.04 USING THE RATE OF SUPERELEVATION AND RUNOFF SHOWN ON THE PLANS. SUPERELEVATION IS TO BE REVOLVED ABOUT THE GRADE POINTS SHOWN ON THE TYPICAL SECTIONS.

SHOULDER CONSTRUCTION:

ASPHALT, EARTH, AND CONCRETE SHOULDER CONSTRUCTION ON THE HIGH SIDE OF SUPERELEVATED CURVES SHALL BE IN ACCORDANCE WITH STD. NO. 560.01

GUARDRAIL:

THE GUARDRAIL LOCATIONS SHOWN ON THE PLANS MAY BE ADJUSTED DURING CONSTRUCTION AS DIRECTED BY THE ENGINEER. THE CONTRACTOR SHOULD CONSULT WITH THE ENGINEER PRIOR TO ORDERING GUARDRAIL MATERIAL.

END BENTS:

THE ENGINEER SHALL CHECK THE STRUCTURE END BENT PLANS, DETAILS, AND CROSS-SECTION PRIOR TO SETTING OF THE SLOPE STAKES FOR THE EMBANKMENT OR EXCAVATION APPROACHING A BRIDGE.

UTILITIES:

UTILITY OWNERS ON THIS PROJECT ARE

STAR COMMUNICATION

ANY RELOCATION OF EXISTING UTILITIES WILL BE ACCOMPLISHED BY OTHERS.

RIGHT-OF-WAY MARKERS:

ALL RIGHT-OF-WAY MARKERS ON THIS PROJECT SHALL BE PLACED BY OTHERS.

EFF. 01-16-2018
REV.

2018 ROADWAY ENGLISH STANDARD DRAWINGS

The following Roadway Standards as appear in "Roadway Standard Drawings" Highway Design Branch - N. C. Department of Transportation - Raleigh, N. C., Dated January, 2018 are applicable to this project and by reference hereby are considered a part of these plans:

STD.NO.	TITLE
DIVISION 2 - EARTHWORK	
200.02	Method of Clearing - Method II
225.02	Guide for Grading Subgrade - Secondary and Local
225.04	Method of Obtaining Superelevation - Two Lane Pavement
DIVISION 4 - MAJOR STRUCTURES	
422.02	Bridge Approach Fills - Type II Modiefied Approach Fill
DIVISION 5 - SUBGRADE, BASES AND SHOULDERS	
560.01	Method of Shoulder Construction - High Side of Superelevated Curve - Method I
DIVISION 8 - INCIDENTALS	
862.01	Guardrail Placement
862.02	Guardrail Installation
862.03	Structure Anchor Units

08-NOV-2021 10:29
R:\Roadway\Proj\17BP.6.R.73_rdy_psh 1A.dgn
$$USERNAME$$

12/2/2016

PROJECT REFERENCE NO.	SHEET NO.
17BP.6.R.73	1B

STATE OF NORTH CAROLINA, DIVISION OF HIGHWAYS

CONVENTIONAL PLAN SHEET SYMBOLS

Note: Not to Scale

S.U.E. = *Subsurface Utility Engineering

BOUNDARIES AND PROPERTY:

- State Line
- County Line
- Township Line
- City Line
- Reservation Line
- Property Line
- Existing Iron Pin — EIP
- Computed Property Corner
- Property Monument — ECM
- Parcel/Sequence Number — 123
- Existing Fence Line
- Proposed Woven Wire Fence
- Proposed Chain Link Fence
- Proposed Barbed Wire Fence
- Existing Wetland Boundary — WLB
- Proposed Wetland Boundary — WLB
- Existing Endangered Animal Boundary — EAB
- Existing Endangered Plant Boundary — EPB
- Existing Historic Property Boundary — HPB
- Known Contamination Area: Soil — S
- Potential Contamination Area: Soil — S
- Known Contamination Area: Water — W
- Potential Contamination Area: Water — W
- Contaminated Site: Known or Potential

BUILDINGS AND OTHER CULTURE:

- Gas Pump Vent or U/G Tank Cap
- Sign — S
- Well — W
- Small Mine
- Foundation
- Area Outline
- Cemetery
- Building
- School
- Church
- Dam

HYDROLOGY:

- Stream or Body of Water
- Hydro, Pool or Reservoir
- Jurisdictional Stream — JS
- Buffer Zone 1 — BZ 1
- Buffer Zone 2 — BZ 2
- Flow Arrow
- Disappearing Stream
- Spring
- Wetland
- Proposed Lateral, Tail, Head Ditch — FLOW
- False Sump

RAILROADS:

- Standard Gauge — CSX TRANSPORTATION
- RR Signal Milepost — MILEPOST 35
- Switch — SWITCH
- RR Abandoned
- RR Dismantled

RIGHT OF WAY & PROJECT CONTROL:

- Secondary Horiz and Vert Control Point
- Primary Horiz Control Point
- Primary Horiz and Vert Control Point
- Exist Permanent Easment Pin and Cap
- New Permanent Easement Pin and Cap
- Vertical Benchmark
- Existing Right of Way Marker
- Existing Right of Way Line
- New Right of Way Line — RW
- New Right of Way Line with Pin and Cap — RW
- New Right of Way Line with Concrete or Granite R/W Marker — RW
- New Control of Access Line with Concrete C/A Marker — CA
- Existing Control of Access — CA
- New Control of Access — CA
- Existing Easement Line — E
- New Temporary Construction Easement — E
- New Temporary Drainage Easement — TDE
- New Permanent Drainage Easement — PDE
- New Permanent Drainage / Utility Easement — DUE
- New Permanent Utility Easement — PUE
- New Temporary Utility Easement — TUE
- New Aerial Utility Easement — AUE

ROADS AND RELATED FEATURES:

- Existing Edge of Pavement
- Existing Curb
- Proposed Slope Stakes Cut — C
- Proposed Slope Stakes Fill — F
- Proposed Curb Ramp — CR
- Existing Metal Guardrail
- Proposed Guardrail
- Existing Cable Guiderail
- Proposed Cable Guiderail
- Equality Symbol
- Pavement Removal

VEGETATION:

- Single Tree
- Single Shrub
- Hedge
- Woods Line
- Orchard
- Vineyard — Vineyard

EXISTING STRUCTURES:

MAJOR:

- Bridge, Tunnel or Box Culvert — CONC
- Bridge Wing Wall, Head Wall and End Wall — CONC WW

MINOR:

- Head and End Wall — CONC HW
- Pipe Culvert
- Footbridge
- Drainage Box: Catch Basin, DI or JB — CB
- Paved Ditch Gutter
- Storm Sewer Manhole — S
- Storm Sewer — S

UTILITIES:

POWER:

- Existing Power Pole
- Proposed Power Pole
- Existing Joint Use Pole
- Proposed Joint Use Pole
- Power Manhole — P
- Power Line Tower
- Power Transformer
- U/G Power Cable Hand Hole
- H-Frame Pole
- U/G Power Line LOS B (S.U.E.*) — P
- U/G Power Line LOS C (S.U.E.*) — P
- U/G Power Line LOS D (S.U.E.*) — P

TELEPHONE:

- Existing Telephone Pole
- Proposed Telephone Pole
- Telephone Manhole — T
- Telephone Pedestal — T
- Telephone Cell Tower
- U/G Telephone Cable Hand Hole — HH
- U/G Telephone Cable LOS B (S.U.E.*) — T
- U/G Telephone Cable LOS C (S.U.E.*) — T
- U/G Telephone Cable LOS D (S.U.E.*) — T
- U/G Telephone Conduit LOS B (S.U.E.*) — TC
- U/G Telephone Conduit LOS C (S.U.E.*) — TC
- U/G Telephone Conduit LOS D (S.U.E.*) — TC
- U/G Fiber Optics Cable LOS B (S.U.E.*) — T FO
- U/G Fiber Optics Cable LOS C (S.U.E.*) — T FO
- U/G Fiber Optics Cable LOS D (S.U.E.*) — T FO

WATER:

- Water Manhole — W
- Water Meter
- Water Valve
- Water Hydrant
- U/G Water Line LOS B (S.U.E*) — W
- U/G Water Line LOS C (S.U.E*) — W
- U/G Water Line LOS D (S.U.E*) — W
- Above Ground Water Line — A/G Water

TV:

- TV Pedestal — C
- TV Tower
- U/G TV Cable Hand Hole — HH
- U/G TV Cable LOS B (S.U.E.*) — TV
- U/G TV Cable LOS C (S.U.E.*) — TV
- U/G TV Cable LOS D (S.U.E.*) — TV
- U/G Fiber Optic Cable LOS B (S.U.E.*) — TV FO
- U/G Fiber Optic Cable LOS C (S.U.E.*) — TV FO
- U/G Fiber Optic Cable LOS D (S.U.E.*) — TV FO

GAS:

- Gas Valve
- Gas Meter
- U/G Gas Line LOS B (S.U.E.*) — G
- U/G Gas Line LOS C (S.U.E.*) — G
- U/G Gas Line LOS D (S.U.E.*) — G
- Above Ground Gas Line — A/G Gas

SANITARY SEWER:

- Sanitary Sewer Manhole
- Sanitary Sewer Cleanout
- U/G Sanitary Sewer Line — SS
- Above Ground Sanitary Sewer — A/G Sanitary Sewer
- SS Forced Main Line LOS B (S.U.E.*) — FSS
- SS Forced Main Line LOS C (S.U.E.*) — FSS
- SS Forced Main Line LOS D (S.U.E.*) — FSS

MISCELLANEOUS:

- Utility Pole
- Utility Pole with Base
- Utility Located Object
- Utility Traffic Signal Box — S
- Utility Unknown U/G Line LOS B (S.U.E.*) — ?UTL
- U/G Tank; Water, Gas, Oil
- Underground Storage Tank, Approx. Loc. — UST
- A/G Tank; Water, Gas, Oil
- Geoenvironmental Boring
- U/G Test Hole LOS A (S.U.E.*)
- Abandoned According to Utility Records — AATUR
- End of Information — E.O.I.

PROJECT REFERENCE NO.	SHEET NO.
17BP.6.R.73	1C-1
Location and Surveys	

SURVEY CONTROL SHEET 17BP.6.R.73

NC GRID
NAD 83 NA 2011

BL

POINT	DESC.	NORTH	EAST	ELEVATION
100	GPS-100	311469.2690	2062299.0190	118.25
101	GPS-101	311906.1640	2063024.1810	116.73
1	080175 BL-1	312064.7290	2063282.8480	115.80
2	080175 BL-2	312196.9210	2063724.0630	112.37
3	080175 BL-3	312057.3200	2064266.7860	114.13

BM1 ELEVATION = 112.08
N 312035 E 2063714
BL STATION 20+54.00 152 RIGHT
BENCHTIE" NAIL SET IN 30" TWIN ELM TREE

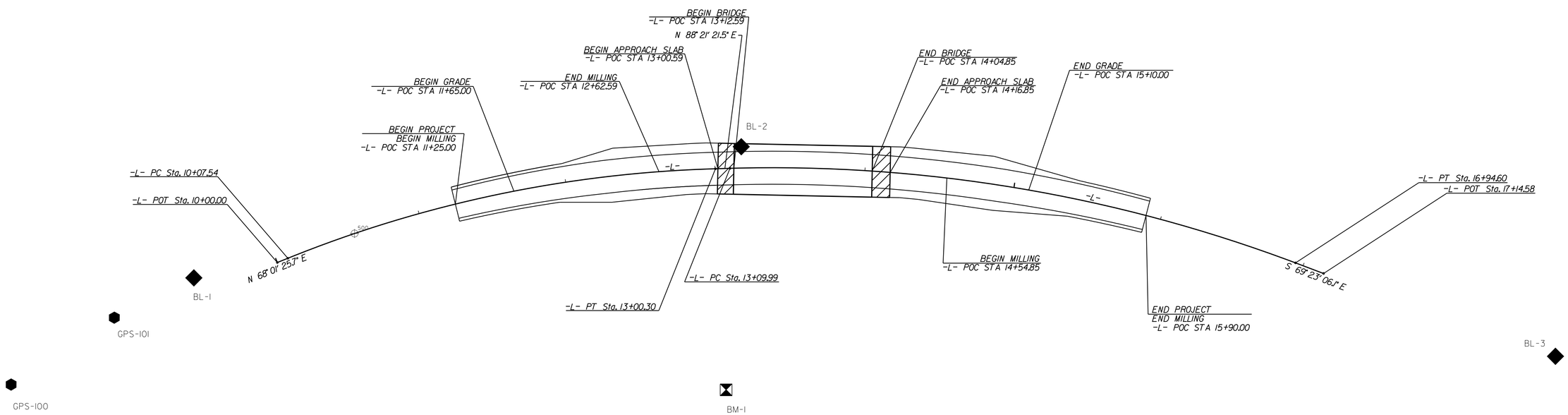

DATUM DESCRIPTION

THE LOCALIZED COORDINATE SYSTEM DEVELOPED FOR THIS PROJECT IS BASED ON THE STATE PLANE COORDINATES ESTABLISHED BY NCDOT FOR MONUMENT "GPS-101"
WITH NAD 83/NA 2011 STATE PLANE GRID COORDINATES OF
NORTHING: 311906.164(ft) EASTING: 2063024.181(ft)
ELEVATION: 116.73(ft)
THE AVERAGE COMBINED GRID FACTOR USED ON THIS PROJECT (GROUND TO GRID) IS: 0.99993539
THE N.C. LAMBERT GRID BEARING AND LOCALIZED HORIZONTAL GROUND DISTANCE FROM "GPS101" TO -L- STATION 10+55.00 IS 499.7762' AT A BEARING OF N 62°12'51.90" W
ALL LINEAR DIMENSIONS ARE LOCALIZED HORIZONTAL DISTANCES
VERTICAL DATUM USED IS NAD 83/2011

NOTES:

1. IF FURTHER INFORMATION REGARDING PROJECT CONTROL IS NEEDED, PLEASE CONTACT THE LOCATION AND SURVEYS UNIT.

2. PROJECT CONTROL WAS ESTABLISHED USING GNSS, THE GLOBAL NAVIGATION SATELLITE SYSTEM.

REVISIONS

6/2/99

23-JAN-2019 12:21
C:\pwworking\Location\Roadway\NCDOT\Division06\17BP.6.R.73\Roadway\Proj\080175_ls_1c-1.dgn
$$$$USERNAME$$$$

PROJECT REFERENCE NO.	SHEET NO.
17BP.6.R.73	1D-1
Location and Surveys	

PROPOSED ALIGNMENT CONTROL SHEET 17BP.6.R.73

POINT	N	E	BEARING	DIST	DELTA	D	L	T	R
POT	312119.835	2063414.842							
LINE			N 68°01′25.7″ E	7.54					
PC	312122.656	2063421.832							
CURVE			N 78°11′23.6″ E	291.23	20°19′55.7″(RT)	06°56′41.8″	292.76	147.94	825.00
PT	312182.261	2063706.896							
LINE			N 88°21′21.5″ E	9.69					
PC	312182.539	2063716.584							
CURVE			S 80°30′52.3″ E	382.19	22°15′32.4″(RT)	05°47′14.8″	384.61	194.76	990.00
PT	312119.555	2064093.553							
LINE			S 69°23′06.1″ E	19.98					
POT	312112.521	2064112.251							

NOTES:

1. IF FURTHER INFORMATION REGARDING PROJECT CONTROL IS NEEDED, PLEASE CONTACT THE LOCATION AND SURVEYS UNIT.

2. PROJECT CONTROL WAS ESTABLISHED USING GNSS, THE GLOBAL NAVIGATION SATELLITE SYSTEM.

REVISIONS

6/2/99

23-JAN-2019 12:23
03_Transportation\Roadway\NCDOT\Division06\17BP.6.R.73\Roadway\Proj\080175_ls_ld-1.dgn
$$$$USERNAME$$$$

PROJECT REFERENCE NO.	SHEET NO.
17BP.6.R.73	1E-1
Location and Surveys	

RIGHT OF WAY CONTROL SHEET 17BP.6.R.73

ROW MARKER CONCRETE OR GRANITE-E

ALIGN	STATION	OFFSET	NORTH	EAST
L	11+30.00	30.00	312130.7326	2063545.3622
L	11+40.00	-30.00	312191.4351	2063541.4777
L	11+50.00	45.00	312120.3223	2063567.2982
L	11+60.00	-50.00	312215.3750	2063557.7974
L	13+00.30	45.00	312137.2798	2063708.1868
L	13+00.30	-50.00	312232.2407	2063705.4613
L	13+09.99	45.00	312137.5579	2063717.8755
L	13+09.99	-50.00	312232.5188	2063715.1499
L	14+80.00	-50.00	312222.3270	2063893.2326
L	15+10.00	-29.97	312197.6371	2063920.8993
L	15+30.00	45.00	312120.3041	2063926.7391
L	15+50.00	30.02	312131.0784	2063948.6118

NOTES:

1. IF FURTHER INFORMATION REGARDING PROJECT CONTROL IS NEEDED, PLEASE CONTACT THE LOCATION AND SURVEYS UNIT.

2. PROJECT CONTROL WAS ESTABLISHED USING GNSS, THE GLOBAL NAVIGATION SATELLITE SYSTEM.

REVISIONS

6/2/99

23-JAN-2019 12:24
$$$$USERNAME$$$$

DocuSign Envelope ID: 26749E82-2C5D-4012-8700-C0F968254A72

PROJECT REFERENCE NO.	SHEET NO.
17BP.6.R.73	2A-1
ROADWAY DESIGN ENGINEER	PAVEMENT DESIGN ENGINEER

NORTH CAROLINA PROFESSIONAL SEAL 022610 ENGINEER BRUCE B. PAYNE

DocuSigned by: Bruce Payne 1/28/2019
82BA45C28B6A495...

DOCUMENT NOT CONSIDERED FINAL UNLESS ALL SIGNATURES COMPLETED

PAVEMENT SCHEDULE

PER NCDOT DIVISION 6

C1	PROP. APPROX. 2.5″ ASPHALT CONCRETE SURFACE COURSE, TYPE S9.5B, AT AN AVERAGE RATE OF 138 LBS. PER SQ. YD. IN EACH OF TWO LAYERS.
C2	PROP. VAR. DEPTH ASPHALT CONCRETE SURFACE COURSE, TYPE S9.5B, AT AN AVERAGE RATE OF 110 LBS. PER SQ. YD. PER 1″ DEPTH. TO BE PLACED IN LAYERS NOT TO EXCEED 1.5″ IN DEPTH.
E1	PROP. APPROX. 4″ ASPHALT CONCRETE BASE COURSE, TYPE B25.0C, AT AN AVERAGE RATE OF 456 LBS. PER SQ. YD.
E2	PROP. VAR. DEPTH ASPHALT CONCRETE BASE COURSE, TYPE B25.0C, AT AN AVERAGE RATE OF 114 LBS. PER SQ. YD. PER 1″ DEPTH, TO BE PLACED IN LAYERS NOT LESS THAN 4″ IN DEPTH OR GREATER THAN 5.5″ IN DEPTH.
T	EARTH MATERIAL
U	EXISTING PAVEMENT
V	MILLING BITUMINOUS PAVEMENT. 2.5″ DEPTH.
W	VARIABLE DEPTH ASPHALT PAVEMENT (SEE WEDGING DETAIL)

NOTE: PAVEMENT EDGE SLOPES ARE 1:1 UNLESS SHOWN OTHERWISE.

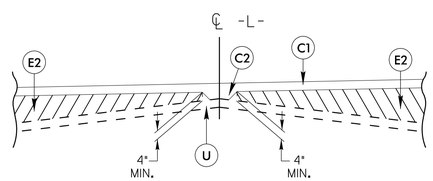

Detail Showing Method of Wedging

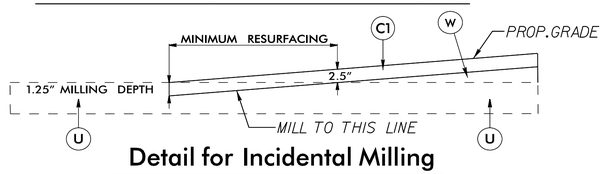

Detail for Incidental Milling

USE DETAIL FOR INCIDENTAL MILLING AS FOLLOWS:
–L– STA. 11+25.00 TO STA. 12+14.39
–L– STA. 15+40.00 TO STA. 15+90.00

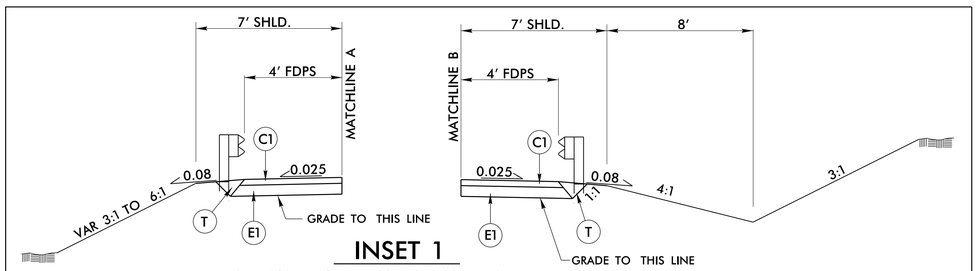

INSET 1

USE TYPICAL WITH TYPICAL SECTION NO. 1 AND 2
–L– STA. 12+30.52 TO STA. 13+12.52
–L– STA. 14+04.92 TO STA. 14+86.92

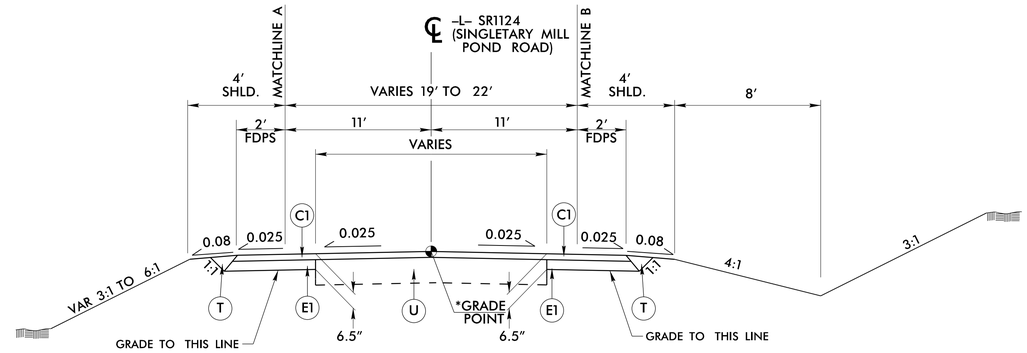

TYPICAL SECTION NO. 1

USE TYPICAL SECTION NO. 1 AS FOLLOWS:
* –L– STA. 11+25.00 TO STA. 11+65.00 (CROWN POINT)
–L– STA. 11+65.00 TO STA. 12+37.59
–L– STA. 14+79.85 TO STA. 15+10.00
* –L– STA. 15+10.00 TO STA. 15+90.00 (CROWN POINT)
NOTE: USE LEVELING COURSE AS NEEDED

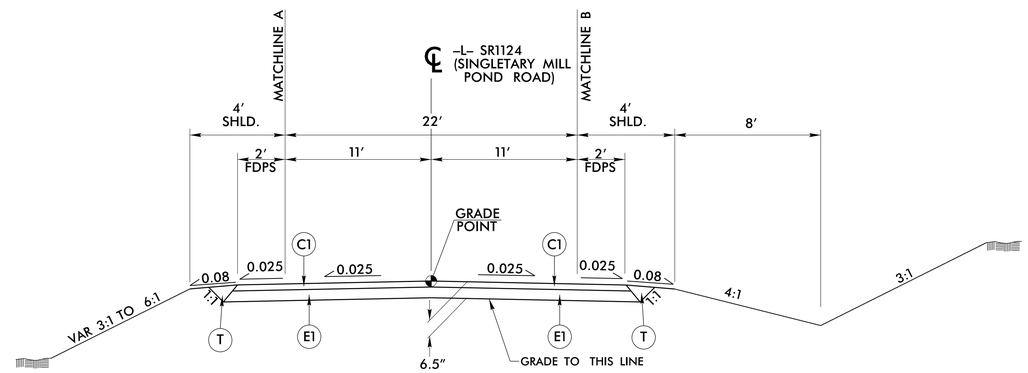

TYPICAL SECTION NO. 2

–L– STA 12+37.59 TO –L– STA 13+12.52 (BEGIN BRIDGE)
–L– STA. 14+04.92 (END BRIDGE) TO STA. 14+79.85

℄ –L– SINGLETARY MILL POND RD (SR 1124)

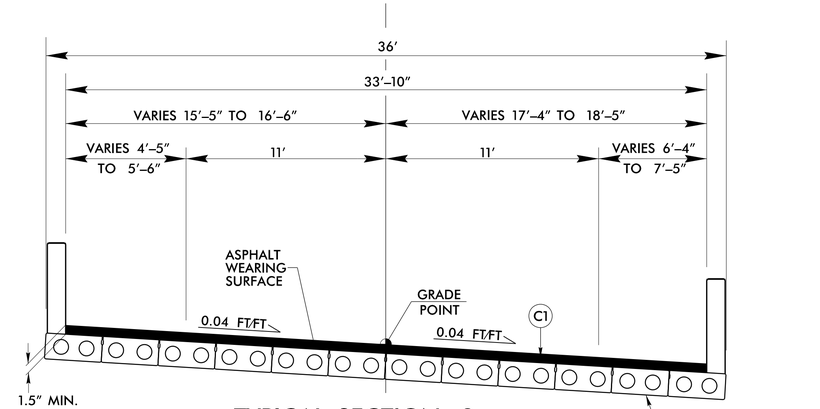

TYPICAL SECTION 3

–L– STA 13+12.52 TO –L– STA 14+04.92

23-JAN-2019 12:25
R:\Roadway\Proj\17BP.6.R.73\Roadway\NCDOT\Division06\17BP.6.R.73_Rdy_typ.dgn
$$$$USERNAME$$$$

DocuSign Envelope ID: 26749E82-2C5D-4012-8700-C0F968254A72

PROJECT REFERENCE NO.	SHEET NO.
17BP.6.R.73	2C-1

STATE OF
NORTH CAROLINA
DEPT. OF TRANSPORTATION
DIVISION OF HIGHWAYS
RALEIGH, N.C.

ENGLISH DETAIL DRAWING FOR
MODIFIED CONCRETE FLUME
WITH CONCRETE OR RIP-RAP DITCH

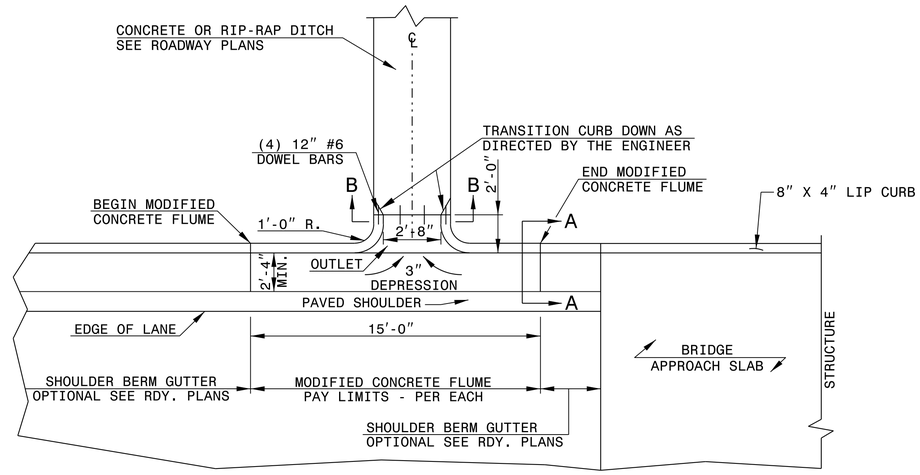

PLAN VIEW

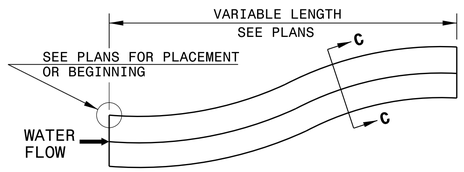

DOWNGRADE OR SAG

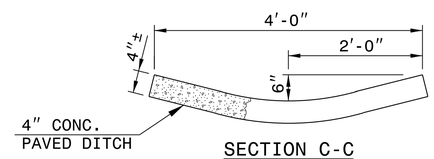

SECTION C-C

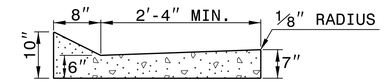

SECTION A-A

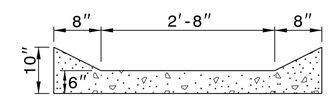

SECTION B-B

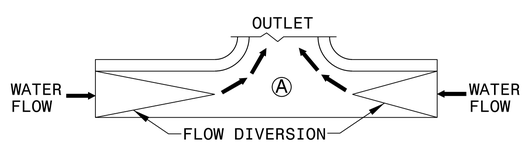

SAG

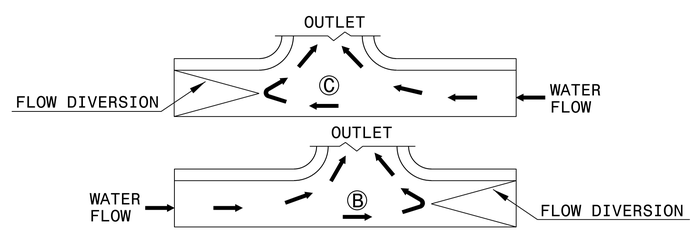

DOWN GRADE

FLOW DIVERSION EXAMPLES

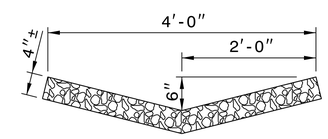

RIP-RAP LINED DITCH

NOTES:

- CONSTRUCT MODIFIED CONCRETE FLUME AND SHOULDER BERM GUTTER IN ACCORDANCE WITH THIS DETAIL.
- CONSTRUCT CONCRETE DITCH IN ACCORDANCE WITH STD. DWG. NO. 850.01.
- CONSTRUCT RIP RAP LINED DITCH IN ACCORDANCE WITH THIS DETAIL, IF CALLED FOR IN PLANS.
- CONCRETE OR RIP RAP LINED DITCH SHALL BE THE TYPE AND LENGTH SPECIFIED BY THE ROADWAY PLANS. THE DITCH SHALL TERMINATE AS SHOWN ON THE PLANS. IF NO TERMINATION IS INDICATED PLACE RIP-RAP AT THE END OF THE DITCH AS INDICATED BY STD. DWG. 876.02 FOR AN 18″ PIPE. TRANSITIONS FROM THE DITCH TO TERMINATION SHALL BE AS DIRECTED BY THE ENGINEER.
- MODIFICATIONS SHALL BE AS DICTATED BY SITE CONDITIONS AND DIRECTED BY THE ENGINEER.

SHEET 1 OF 1
MODFLMDTCH

STATE OF
NORTH CAROLINA
DEPT. OF TRANSPORTATION
DIVISION OF HIGHWAYS
RALEIGH, N.C.

ENGLISH DETAIL DRAWING FOR
MODIFIED CONCRETE FLUME
WITH CONCRETE OR RIP-RAP DITCH

SHEET 1 OF 1
MODFLMDTCH

DOCUMENT NOT CONSIDERED FINAL
UNLESS ALL SIGNATURES COMPLETED

DocuSigned by:
1/29/2019

CONTRACT STANDARDS
AND DEVELOPMENT UNIT
Office 919-707-6950 FAX 919-250-4119

SEE PLATE FOR TITLE

ORIGINAL BY: E.E. Ward DATE: Apr. 2002
MODIFIED BY: J.S. Howerton DATE: October 2017
CHECKED BY: DATE:
FILE SPEC.: w:details\stand\modifiedflume.dgn

18-OCT-2017 14:17
S:\Contracts\Contracts\Special Details\ericward\usr\details\stand\modifiedflume.dgn
jhowerton AT CSD-242595

6/21/00

COMPUTED BY: IAB	DATE: September 4, 2018
CHECKED BY: BBP	DATE: December 24, 2018

PROJECT REFERENCE NO.	SHEET NO.
17BP.6.R.73	3B-1

STATE OF NORTH CAROLINA
DIVISION OF HIGHWAYS

SUMMARY OF QUANTITIES

SUMMARY OF EARTHWORK

STATION	STATION	UNCL. EXCAV.	UNDERCUT EXCAV.	EMBANK. +%	BORROW	WASTE
–L–						
11+25.00	13+12.52	6	0	366	360	0
14+04.92	15+90.00	26	0	146	121	0
PROJECT TOTALS:		32			481	0
REPLACE TOP SOIL ON BORROW PIT (5%)					24	
PROJECT TOTALS:		32			505	0
SAY:		40			510	

Earthwork quantities are calculated by Atkins.
These earthwork quantities are based in part on subsurface data provided by the Geotechnical Engineering Unit.

NOTE: Approximate quantities only. Unclassified Excavation, Shoulder Borrow, Fine Grading, and Clearing and Grubbing will be paid for at the contract lump sum price for "Grading".

SHOULDER BERM GUTTER SUMMARY

SURVEY LINE	STATION	STATION	LENGTH
–L–	14+16.78	14+38.91	23.43′
		TOTAL:	23.43′
		SAY:	24′

PAVEMENT REMOVAL SUMMARY

SURVEY LINE	STATION	STATION	LOCATION	SQUARE YARDS
–L–	12+63	13+32	CL	152.13
–L–	13+85	14+55	CL	144.32
			TOTAL:	296.44
			SAY:	300

NOTE: Invert Elevations are for Bid Purposes only and shall not be used for project construction stakeout. See "Standard Specifications For Roads and Structures, Section 300-5".

LIST OF PIPES, ENDWALLS, ETC. (FOR PIPES 48" & UNDER)

STATION / SIZE / THICKNESS OR GAUGE	LOCATION (LT,RT, OR CL)	STRUCTURE NO. FROM	STRUCTURE NO. TO	TOP ELEVATION	INVERT ELEVATION	INVERT ELEVATION	SLOPE CRITICAL	DRAINAGE PIPE (RCP, CSP, CAAP, HDPE, or PVC) 12"	15"	18"	24"	30"	36"	42"	48"	C.S. PIPE (UNLESS NOTED OTHRWISE) 12" .064	15" .064	18" .064	24" .064	30" .079	36" .079	42" .109	48" .109	CLASS III R.C. PIPE (UNLESS OTHERWISE NOTED) 12"	15"	18"	24"	30"	36"	42"	48"	15" SIDE DRAIN PIPE	18" SIDE DRAIN PIPE	24" SIDE DRAIN PIPE	ENDWALLS STD. 838.01, STD. 838.11 OR STD. 838.80 (UNLESS NOTED OTHERWISE) CU. YDS. R.C.P.	C.S.P.	QUANTITIES FOR DRAINAGE STRUCTURES PER EACH (0' THRU 5.0')	* TOTAL L.F. FOR PAY QUANTITY SHALL BE COL. 'A' + (1.3 X COL. 'B') LIN. *FT. A 5.0' THRU 10.0'	B 10.0' AND ABOVE	C.B. STD. 840.01 OR STD. 840.02	FRAME, GRATES AND HOOD STANDARD 840.03 TYPE OF GRATE E	F	G	D.I. STD. 840.14 OR STD. 840.15	D.I. FRAME & GRATE STD. 840.16	G.D.I. TYPE "A" STD. 840.17 OR 840.26	G.D.I. TYPE "B" STD. 840.18 OR 840.27	G.D.I. TYPE "D" STD. 840.19 OR 840.28	G.D.I. FRAME WITH GRATE STD. 840.22	G.D.I. FRAME WITH TWO GRATES STD. 840.22	G.D.I. (N.S.) FRAME WITH GRATE STD. 840.24	G.D.I. (N.S.) FRAME WITH TWO GRATES STD. 840.24	J.B. STD. 840.31 OR 840.32								CORR. STEEL ELBOWS NO. & SIZE	CONC. COLLARS CL. "B" C.Y. STD 840.72	CONC. & BRICK PIPE PLUG, C.Y. STD. 840.71	MODIFIED CONCRETE FLUME	REMARKS
14+32 –L–	RT	401																																																													1	
TOTAL																																																															1	

ABBREVIATIONS

C.B.	CATCH BASIN
N.D.I.	NARROW DROP INLET
D.I.	DROP INLET
G.D.I.	GRATED DROP INLET
G.D.I. (N.S.)	GRATED DROP INLET (NARROW SLOT)
J.B.	JUNCTION BOX
M.H.	MANHOLE
T.B.D.I.	TRAFFIC BEARING DROP INLET
T.B.J.B.	TRAFFIC BEARING JUNCTION BOX

"N" = DISTANCE FROM EDGE OF LANE TO FACE OF GUARDRAIL.
TOTAL SHOULDER WIDTH = DISTANCE FROM EDGE OF TRAVEL LANE TO SHOULDER BREAK POINT.
FLARE LENGTH = DISTANCE FROM LAST SECTION OF PARALLEL GUARDRAIL TO END OF GUARDRAIL.
W = TOTAL WIDTH OF FLARE FROM BEGINNING OF TAPER TO END OF GUARDRAIL.
G = GATING IMPACT ATTENUATOR TYPE 350
NG = NON-GATING IMPACT ATTENUATOR TYPE 350

GUARDRAIL SUMMARY

SURVEY LINE	BEG. STA.	END STA.	LOCATION	LENGTH STRAIGHT	LENGTH SHOP CURVED	LENGTH DOUBLE FACED	WARRANT POINT APPROACH END	WARRANT POINT TRAILING END	"N" DIST. FROM E.O.L.	TOTAL SHOUL. WIDTH	FLARE LENGTH APPROACH END	FLARE LENGTH TRAILING END	W APPROACH END	W TRAILING END	ANCHORS XI MOD	XI	GREU TL-3	M-350	TYPE III	CAT-1	VI MOD	MOD B-77	AT-1	IMPACT ATTENUATOR TYPE 350 EA	G	NG	SINGLE FACED GUARDRAIL	REMOVE AND RESET EXISTING GUARDRAIL	REMOVE AND STOCKPILE EXISTING GUARDRAIL	REMARKS
–L–	12+29.06	13+11.62 (BEGIN BRIDGE)	RT	81.25′			13+11.62 (BEGIN BRIDGE)		5.33′	7′	56′	20.72′	1.9′	2′			1		1											
–L–	14+05.74 (END BRIDGE)	14+88.29	RT	81.25′				14+05.74 (END BRIDGE)	5.25′	7′	22.94′	53.77′	2′	1.9′			1		1											
–L–	12+33.61	13+13.35 (BEGIN BRIDGE)	LT	81.25′				13+13.35 (BEGIN BRIDGE)	6.5′	7′	52.5′	23.45′	1.9′	2′			1		1											
–L–	14+04.16 (END BRIDGE)	14+83.89	LT	81.25′			14+04.16 (END BRIDGE)		6.5′	7′	22.19′	53.76′	2′	1.9′			1		1											
			SUBTOTAL	325′																										
		LESS 4 TYPE III @ 18.75′ EACH		75′																										
		LESS 4 GREU TL-3 @ 50′ EACH		200′																										
			PROJECT TOTALS	50′													4		4											
			SAY	50′													4		4											ADDITIONAL GUARDRAIL POSTS = 5

08-NOV-2021 10:46
R:\Roadway\Proj\17BP.6.R.73_psh_3B-1.dgn
$$$$USERNAME$$$$

DocuSign Envelope ID: EE90BE65-8B93-4608-A14E-CA8373CDD3BF

5/14/99

PROJECT REFERENCE NO.	SHEET NO.
17BP.6.R.73	4
R/W SHEET NO.	

ROADWAY DESIGN ENGINEER
NORTH CAROLINA PROFESSIONAL SEAL 022610 ENGINEER BRUCE E. PAYNE, JR.
DocuSigned by: Bruce Payne
82BA45C2BB6A495... 11/8/2021

HYDRAULICS ENGINEER
NORTH CAROLINA PROFESSIONAL SEAL 014455 ENGINEER TED W. BARTELT
DocuSigned by: Ted Bartelt
D79457C456A4F7... 11/8/2021

DOCUMENT NOT CONSIDERED FINAL UNLESS ALL SIGNATURES COMPLETED

NC GRID
NAD 83/NA 2011

-L-	
PI Sta 11+55.47	PI Sta 15+04.75
Δ = 20° 19' 55.7" (RT)	Δ = 22° 15' 32.4" (RT)
D = 6° 56' 41.8"	D = 5° 47' 14.8"
L = 292.76'	L = 384.61'
T = 147.94'	T = 194.76'
R = 825.00'	R = 990.00'
SE = .04	SE = .04
DS = 45MPH	DS = 50MPH

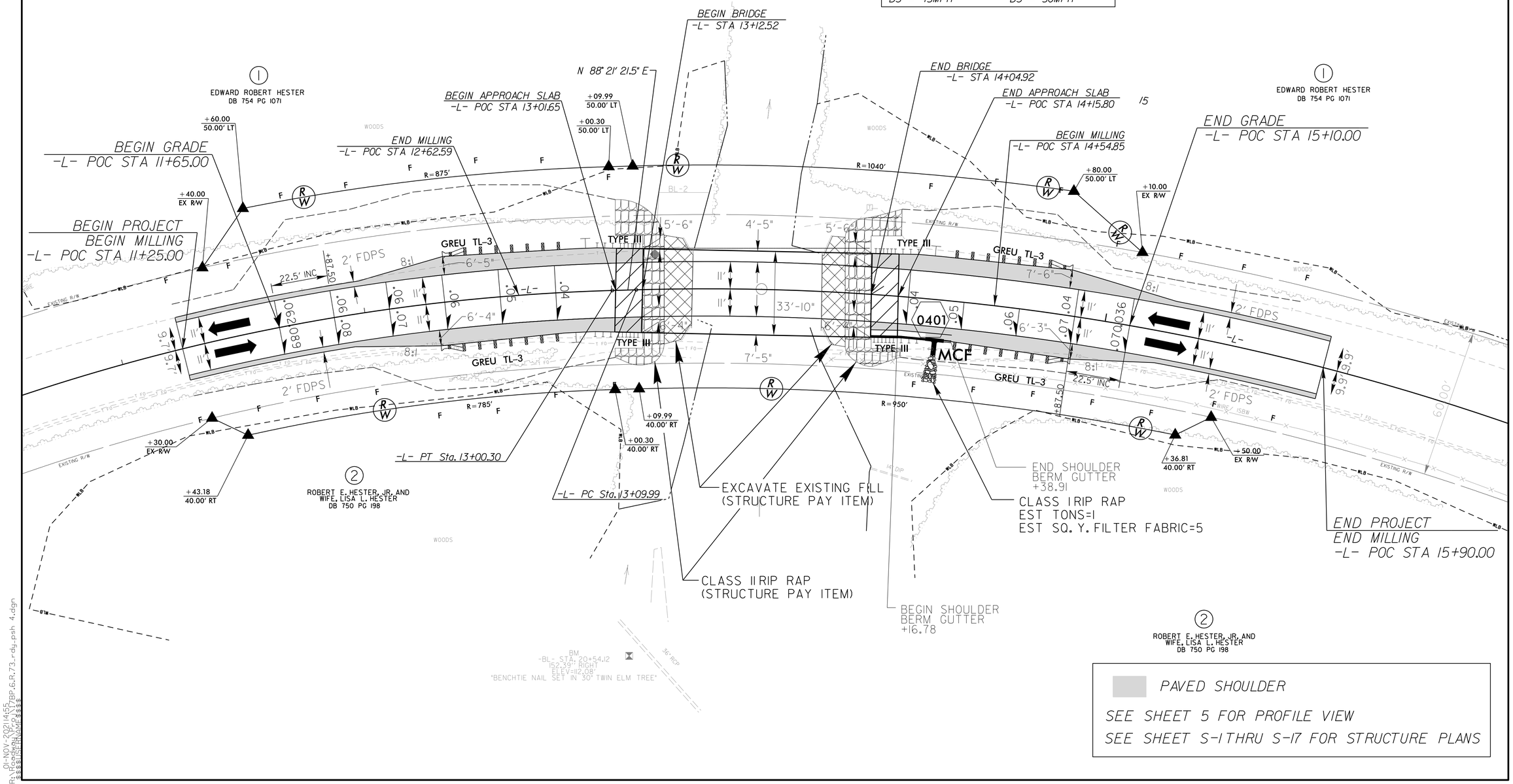

PAVED SHOULDER

SEE SHEET 5 FOR PROFILE VIEW

SEE SHEET S-1 THRU S-17 FOR STRUCTURE PLANS

01-NOV-2021 14:55
R:\Roadway\Proj\17BP.6.R.73_rdy_psh 4.dgn
$$$$USERNAME$$$$

DocuSign Envelope ID: 26749E82-2C5D-4012-8700-C0F968254A72

5/14/93

PROJECT REFERENCE NO.	SHEET NO.
17BP.6.R.73	5

ROADWAY DESIGN ENGINEER
NORTH CAROLINA PROFESSIONAL SEAL 022610 ENGINEER BRUCE R. PAYNE, JR.
DocuSigned by: Bruce Payne 1/28/2019
B2B445C2BB64495...

HYDRAULICS ENGINEER
NORTH CAROLINA PROFESSIONAL SEAL 014455 ENGINEER TED W. BARTLETT
DocuSigned by: Ted Bartlett 1/29/2019
D704607C46A4473...

DOCUMENT NOT CONSIDERED FINAL UNLESS ALL SIGNATURES COMPLETED

–L– SINGLETARY MILL POND ROAD (SR 1124)

–L–

STRUCTURE HYDRAULIC DATA

DESIGN DISCHARGE	=	900	CFS
DESIGN FREQUENCY	=	25	YRS
DESIGN HW ELEVATION	=	109.2	FT
BASE DISCHARGE	=	1300	CFS
BASE FREQUENCY	=	100	YRS
BASE HW ELEVATION	=	110.1	FT
OVERTOPPING DISCHARGE	=	3800	CFS
OVERTOPPING FREQUENCY	=	500+	YRS
OVERTOPPING ELEVATION	=	113.4	FT

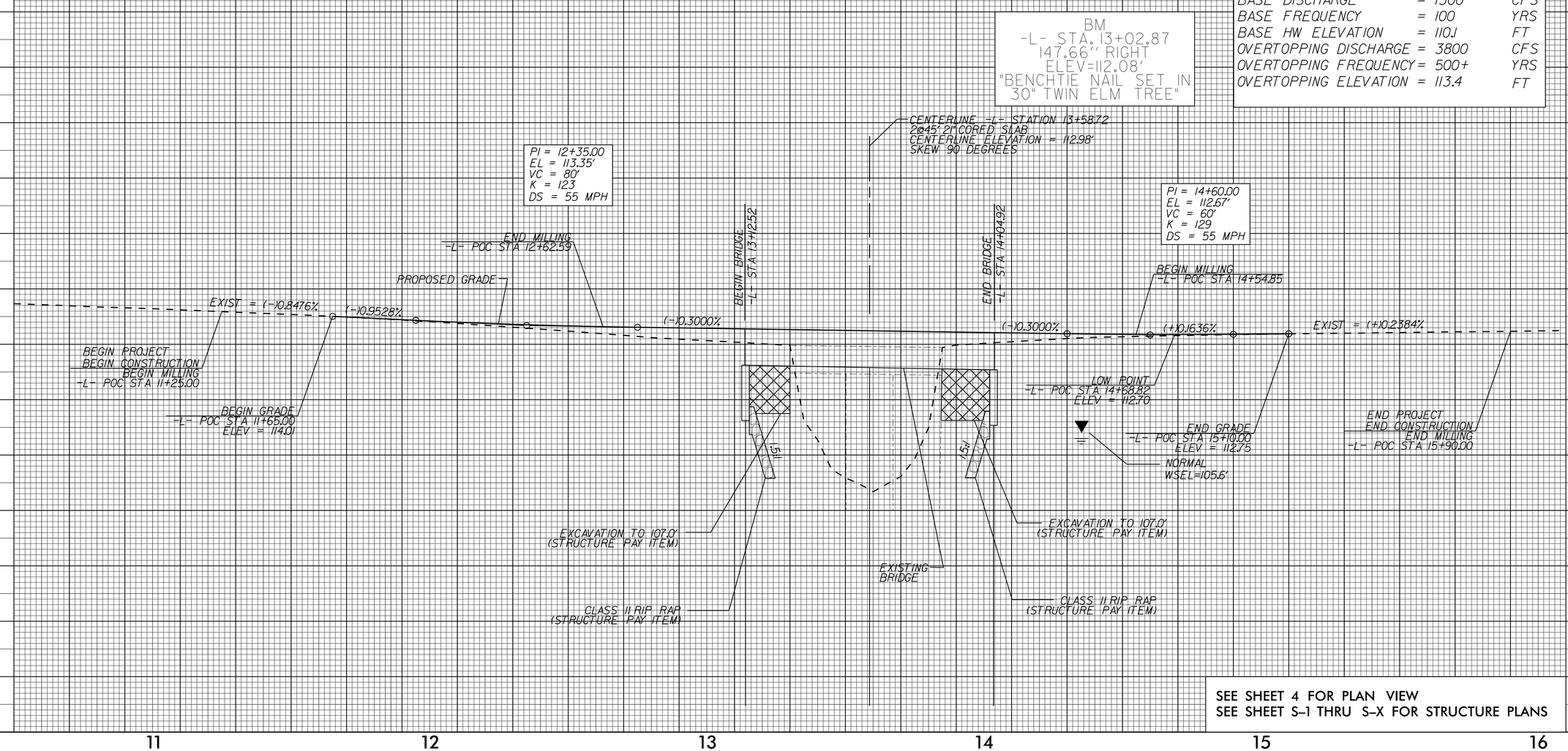

SEE SHEET 4 FOR PLAN VIEW
SEE SHEET S-1 THRU S-X FOR STRUCTURE PLANS

23-JAN-2019 12:43
R:\Roadway\Proj\17BP.6.R.73_rdy_pf1.psh.dgn
$$$$USERNAME$$$$

DocuSign Envelope ID: EF654FBC-DC92-441F-BCC7-A7F23DA08BAD

STATE OF NORTH CAROLINA
DIVISION OF HIGHWAYS

TRANSPORTATION MANAGEMENT PLAN

BLADEN COUNTY

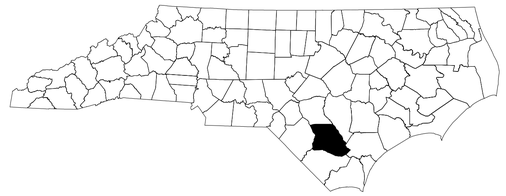

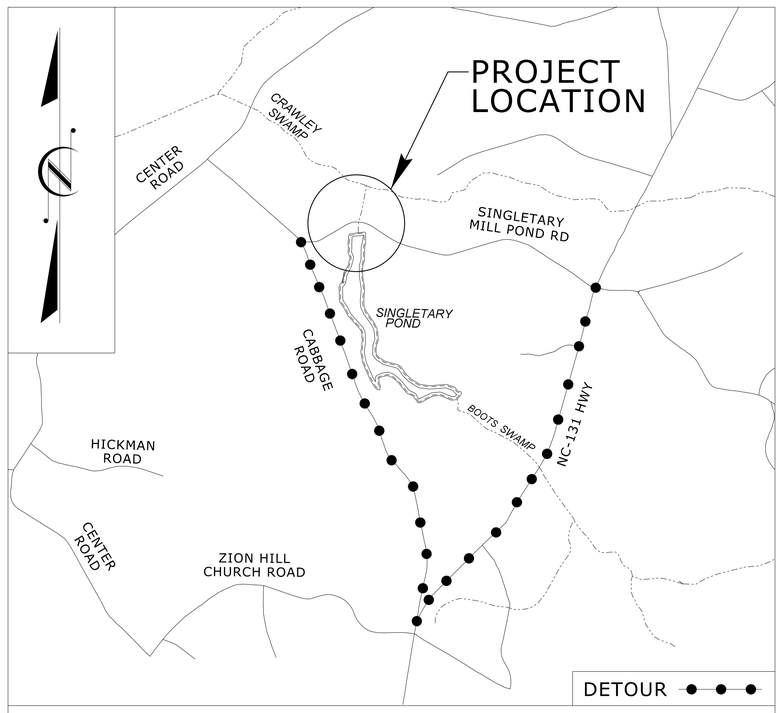

VICINITY MAP

LOCATION: REPLACE BRIDGE NO. 080175 OVER CRAWLEY CREEK ON SR 1124

PLAN PREPARED FOR N.C.D.O.T. BY:

ATKINS 1616 EAST MILLBROOK ROAD, SUITE 160
RALEIGH, NORTH CAROLINA 27609
(919) 876-6888 NCBEES #F-0326

WORK ZONE SAFETY & MOBILITY
"from the MOUNTAINS to the COAST"

N.C.D.O.T. DIVISION 06 TRAFFIC ENGINEERING
PO BOX 1150, FAYETTEVILLE, NC 28302 (MAIL)
450 TRANSPORTATION DRIVE, FAYETTEVILLE, NC 28301 (DELIVERY)
PHONE: (910) 364-0606 FAX: (910) 437-2599

FRANK D. WEST, JR — *DIVISION TRAFFIC ENGINEER*
JAMES V. FLOWERS — *ASSISTANT DIVISION TRAFFIC ENGINEER*

DIVISION OF HIGHWAYS · STATE OF NORTH CAROLINA · DEPARTMENT OF TRANSPORTATION · WORK ZONE TRAFFIC CONTROL

INDEX OF SHEETS

SHEET NO.	TITLE
TMP-1	TITLE SHEET, VICINITY MAP, AND INDEX OF SHEETS
TMP-1A	LIST OF APPLICABLE ROADWAY STANDARD DRAWINGS, LEGEND, GENERAL NOTES, AND PHASING
TMP-2	SPECIAL SIGN DESIGN
TMP-3	TEMPORARY TRAFFIC CONTROL - OFF-SITE DETOUR AND DETOUR SIGNS

DOCUMENT NOT CONSIDERED FINAL UNLESS ALL SIGNATURES COMPLETED

APPROVED: DocuSigned by: Melissa Toth D86DCF8E04D04AF...

DATE: 2/11/2019

NORTH CAROLINA PROFESSIONAL SEAL 025892 ENGINEER MELISSA B. TOTH

SHEET NO.
TMP-1

TIP PROJECT: 17BP.6.R.73

2/11/2019
G:\Transportation\Roadway\NCDOT\Division06\17BP.6.R.73\Traffic\TrafficControl\TCP\17BP6R73 - TCP 01.dgn
User:ACEV7019

DocuSign Envelope ID: EF654FBC-DC92-441F-BCC7-A7F23DA08BAD

PROJ. REFERENCE NO.	SHEET NO.
17BP.6.R.73	TMP-1A

ROADWAY STANDARD DRAWINGS

THE FOLLOWING ROADWAY STANDARDS AS SHOWN IN "ROADWAY STANDARD DRAWINGS" - PROJECT SERVICES UNIT - N.C. DEPARTMENT OF TRANSPORTATION - RALEIGH, N.C., DATED JANUARY 2012 ARE APPLICABLE TO THIS PROJECT AND BY REFERENCE HEREBY ARE CONSIDERED A PART OF THESE PLANS:

STD. NO.	TITLE
1101.03	TEMPORARY ROAD CLOSURES
1101.11	TRAFFIC CONTROL DESIGN TABLES
1110.01	STATIONARY WORK ZONE SIGNS
1145.01	BARRICADES
1205.01	PAVEMENT MARKINGS - LINE TYPES AND OFFSETS
1205.01	PAVEMENT MARKINGS - LINE TYPES AND OFFSETS
1205.02	PAVEMENT MARKINGS - TWO-LANE AND MULTILANE ROADWAYS
1205.04	PAVEMENT MARKINGS - INTERSECTIONS
1205.12	PAVEMENT MARKINGS - BRIDGES
1250.01	RAISED PAVEMENT MARKERS - INSTALLATION SPACING
1251.01	RAISED PAVEMENT MARKERS - PERMANENT AND TEMPORARY

LEGEND

GENERAL

- DIRECTION OF TRAFFIC FLOW
- DIRECTION OF PEDESTRIAN TRAFFIC FLOW
- EXIST. PVMT.
- NORTH ARROW
- PROPOSED PVMT.
- TEMP. SHORING (LOCATION PURPOSES ONLY)
- WORK AREA
- REMOVAL

TRAFFIC CONTROL DEVICES

- BARRICADE (TYPE III)
- CONE
- DRUM
- SKINNY DRUM
- TUBULAR MARKER
- TEMPORARY CRASH CUSHION
- FLASHING ARROW BOARD
- FLAGGER
- LAW ENFORCEMENT
- TRUCK MOUNTED ATTENUATOR (TMA)
- CHANGEABLE MESSAGE SIGN

TEMPORARY SIGNING

- PORTABLE SIGN
- STATIONARY SIGN
- STATIONARY OR PORTABLE SIGN

GENERAL NOTES

CHANGES MAY BE REQUIRED WHEN PHYSICAL DIMENSIONS IN THE DETAIL DRAWINGS, STANDARD DETAILS AND ROADWAY DETAILS ARE NOT ATTAINABLE TO MEET FIELD CONDITIONS OR RESULT IN DUPLICATE OR UNDESIRED OVERLAPPING OF DEVICES. MODIFICATION MAY INCLUDE: MOVING, SUPPLEMENTING, COVERING, OR REMOVAL OF DEVICES AS DIRECTED BY THE ENGINEER.

THE FOLLOWING GENERAL NOTES APPLY AT ALL TIMES FOR THE DURATION OF THE CONSTRUCTION PROJECT EXCEPT WHEN OTHERWISE NOTED IN THE PLAN OR DIRECTED BY THE ENGINEER.

TRAFFIC PATTERN ALTERATIONS

A) NOTIFY THE ENGINEER THIRTY-ONE (31) CALENDAR DAYS PRIOR TO ANY TRAFFIC PATTERN ALTERATION.

SIGNING

B) INSTALL ADVANCED WORK ZONE WARNING SIGNS WHEN WORK IS WITHIN 40 FT FROM THE EDGE OF TRAVEL LANE AND NO MORE THAN THREE (3) DAYS PRIOR TO THE BEGINNING OF CONSTRUCTION.

C) PROVIDE SIGNING AND DEVICES REQUIRED TO CLOSE THE ROAD ACCORDING TO THE ROADWAY STANDARD DRAWINGS AND TRAFFIC CONTROL PLANS.

PROVIDE SIGNING REQUIRED FOR THE OFF-SITE DETOUR ROUTE AS SHOWN IN THE TRAFFIC CONTROL PLANS.

D) COVER OR REMOVE ALL SIGNS AND DEVICES REQUIRED TO CLOSE THE ROAD WHEN ROAD CLOSURE IS NOT IN OPERATION.

COVER OR REMOVE ALL SIGNS AND DEVICES REQUIRED FOR THE OFF-SITE DETOUR WHEN THE DETOUR IS NOT IN OPERATION.

E) ENSURE ALL NECESSARY SIGNING IS IN PLACE PRIOR TO ALTERING ANY TRAFFIC PATTERN.

TRAFFIC CONTROL DEVICES

F) PLACE TYPE III BARRICADES, WITH "ROAD CLOSED" SIGN R11-2 ATTACHED, OF SUFFICIENT LENGTH TO CLOSE ENTIRE ROAD.

PAVEMENT MARKINGS AND MARKERS

G) TIE PROPOSED PAVEMENT MARKING LINES TO EXISTING PAVEMENT MARKING LINES.

H) REMOVE/REPLACE ANY CONFLICTING/DAMAGED PAVEMENT MARKINGS AND MARKERS.

PHASING

STEP 1: INSTALL ALL DETOUR SIGNING KEEPING SIGNS COVERED (SEE SHEET TMP-3)

STEP 2: USING ROADWAY STANDARD DRAWING 1101.03, SHEETS 1 OF 9, CLOSE SINGLETARY MILL POND RD (SR 1124) TO TRAFFIC. UNCOVER ALL DETOUR SIGNING AND SHIFT TRAFFIC TO DETOUR (SEE SHEET TMP-3).

STEP 3: DISMANTLE AND REMOVE EXISTING BRIDGE

STEP 4: CONSTRUCT PROPOSED STRUCTURE, APPROACH ROADWAY TIE-INS AND ASSOCIATED ITEMS INCLUDING FINAL PAVEMENT MARKINGS AND MARKERS.

STEP 5: REMOVE ALL DETOUR SIGNING, ALL TEMPORARY TRAFFIC CONTROL DEVICES, AND OPEN SINGLETARY MILL POND RD (SR 1124) TO TRAFFIC.

ATKINS
1616 EAST MILLBROOK ROAD, SUITE 160
RALEIGH, NORTH CAROLINA 27609
(919) 876-6888 NCBEES #F-0326

APPROVED: DocuSigned by: Melissa Toth D86DCFBE04D04AF...
DATE: 2/11/2019

NORTH CAROLINA PROFESSIONAL SEAL 025892 ENGINEER MELISSA B. TOTH

DOCUMENT NOT CONSIDERED FINAL UNLESS ALL SIGNATURES COMPLETED

DIVISION OF HIGHWAYS STATE OF NORTH CAROLINA DEPARTMENT OF TRANSPORTATION WORK ZONE TRAFFIC CONTROL

ROADWAY STANDARD DRAWINGS, LEGEND, GENERAL NOTES AND PHASING

2/7/2019
G:\Transportation\Roadway\NCDOT\Division06\17BP.6.R.73\Traffic\TrafficControl\TCP\17BP6R73 - TCP 01A.dgn
User:ACEV709

DocuSign Envelope ID: EF654FBC-DC92-441F-BCC7-A7F23DA08BAD

PROJ. REFERENCE NO.	SHEET NO.
17BP.6.R.73	TMP-2

SIGN NUMBER: SP1
TYPE: STATIONARY
QUANTITY: SEE PLANS

SIGN WIDTH: 4′-6″
HEIGHT: 2′-0″
TOTAL AREA: 9.0 Sq.Ft.

BORDER TYPE: INSET
RECESS: 0.47″
WIDTH: 0.63″
RADII: 1.5″

NO. Z BARS:
LENGTH:

BACKG COLOR: Fluorescent Orange
COPY COLOR: Black

SYMBOL	X	Y	WID	HT

MAT′L: 0.080″ (2.0 mm) ALUMINUM

DESIGN BY: JG OERTER
PROJECT ID: 17BP.6.R.73

CHECKED BY:
LOCATION: BLADEN COUNTY

July 17, 2017
DIV: 6

USE NOTES: 1,2

1. Legend and border shall be direct applied black non-reflective sheeting.
2. Background shall be NC GRADE B fluorescent orange retroreflective sheeting.

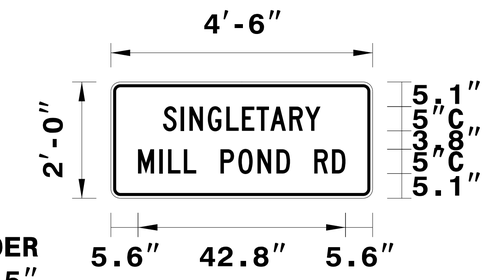

BORDER
R=1.5″
TH=0.63″
IN=0.47″

Panel Style: construction_guide.ssi
M.U.T.C.D.: 2009 Edition

Spacing Factor is 1 unless specified otherwise

LETTER POSITIONS

Letter locations are panel edge to lower left corner

																										Series/Size Text Length
	S	I	N	G	L	E	T	A	R	Y																C 2000
	10.7	14.4	16.2	20	23.8	27	30	32.9	36.8	40																32.5
	M	I	L	L		P	O	N	D		R	D														C 2000
	5.6	10	11.8	15.1	17.6	22.6	26.3	30.3	34.2	37	42	45.6														42.8

NORTH CAROLINA D.O.T. SIGN DETAIL

APPROVED: DocuSigned by: Melissa Toth D86DCFBE04D04AF...
DATE: 2/11/2019

NORTH CAROLINA PROFESSIONAL SEAL 025892 ENGINEER MELISSA B. TOTH

DOCUMENT NOT CONSIDERED FINAL UNLESS ALL SIGNATURES COMPLETED

DIVISION OF HIGHWAYS · STATE OF NORTH CAROLINA · DEPARTMENT OF TRANSPORTATION · WORK ZONE TRAFFIC CONTROL

SINGLETARY
MILL POND RD
(SR 1124)
SPECIAL SIGN
DESIGN

ATKINS 1616 EAST MILLBROOK ROAD, SUITE 160
RALEIGH, NORTH CAROLINA 27609
(919) 876-6888 NCBEES #F-0326

2/7/2019
G:\Transportation\Roadway\NCDOT\Division06\17BP.6.R.73\Traffic\TrafficControl\TCP\17BP6R73 - TCP 02.dgn
User:ACEY7019

DocuSign Envelope ID: EF654FBC-DC92-441F-BCC7-A7F23DA08BAD

PROJ. REFERENCE NO.	SHEET NO.
17BP.6.R.73	TMP-3

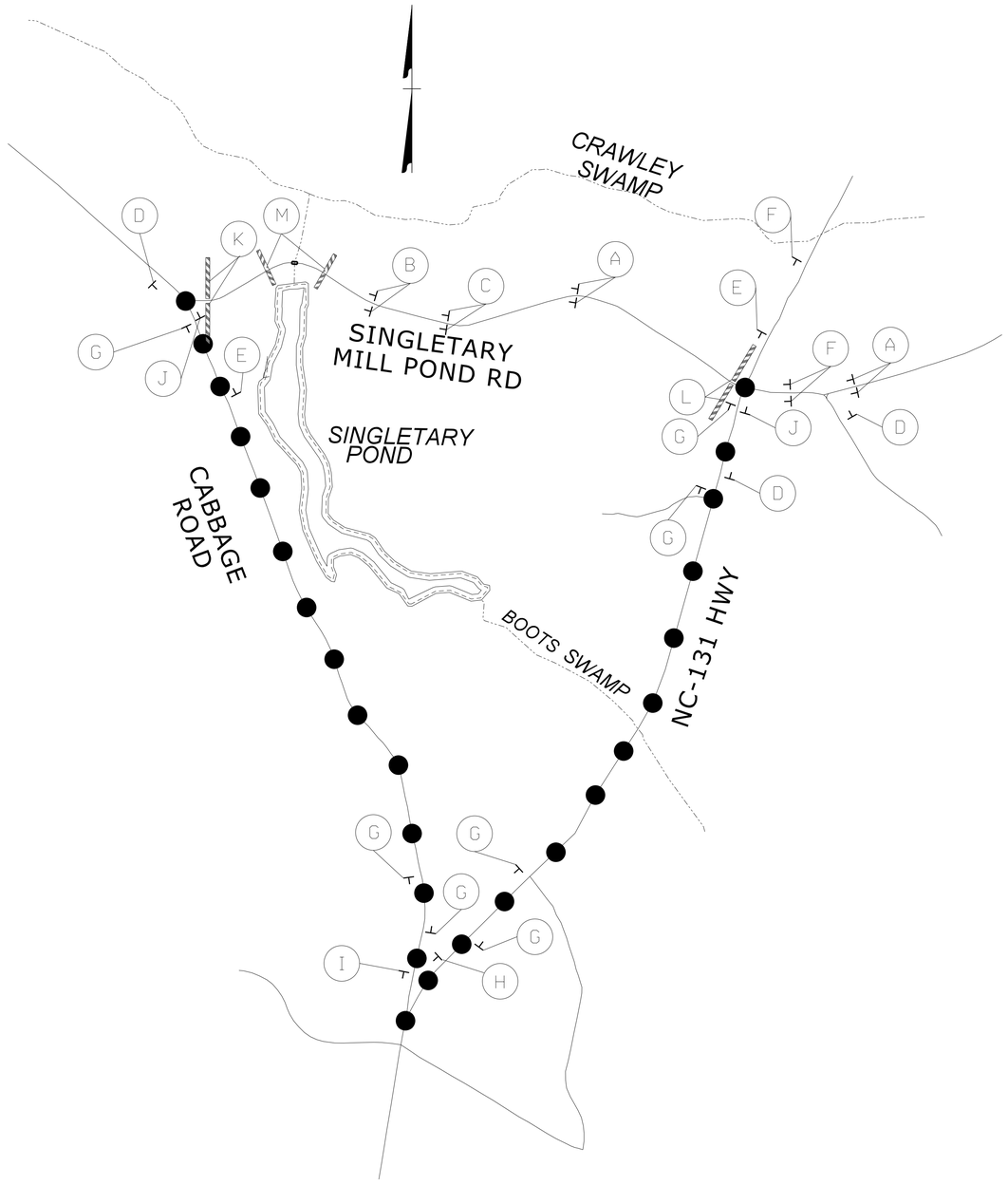

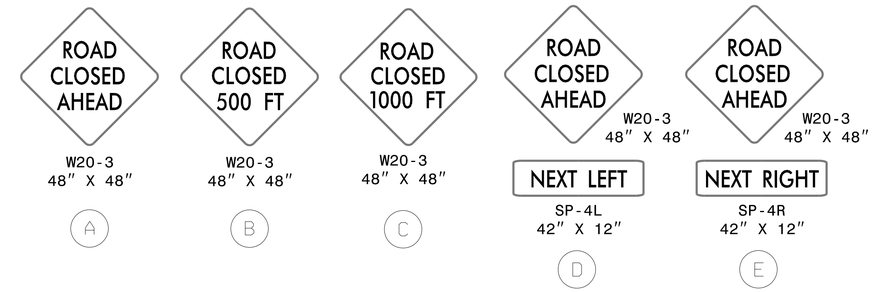

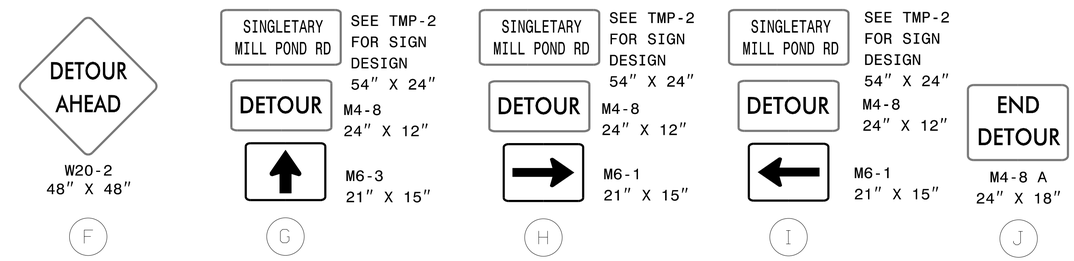

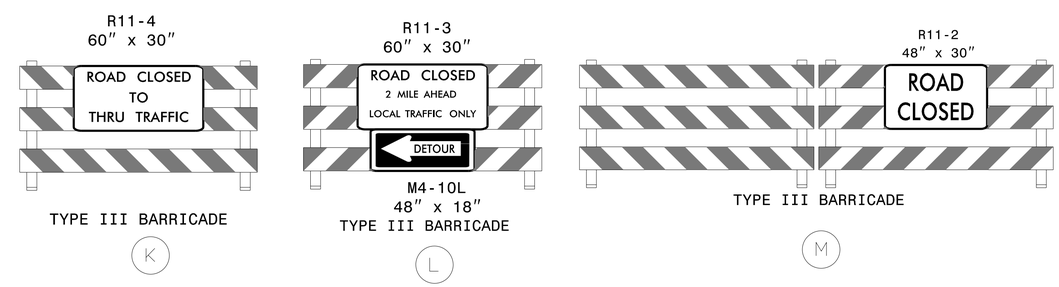

DETOUR ROUTE

SEE RSD 1101.03, SHEET 1 OF 9 FOR ADDITIONAL INFOMRAITON ON SIGN LOCATIONS AND NOTES.

ATKINS 1616 EAST MILLBROOK ROAD, SUITE 160
RALEIGH, NORTH CAROLINA 27609
(919) 876-6888 NCBEES #F-0326

APPROVED: DocuSigned by: Melissa Toth D86DCF8E04D04AF...

DATE: 2/11/2019

NORTH CAROLINA PROFESSIONAL SEAL 025892 ENGINEER MELISSA B. TOTH

DOCUMENT NOT CONSIDERED FINAL UNLESS ALL SIGNATURES COMPLETED

DIVISION OF HIGHWAYS · STATE OF NORTH CAROLINA · DEPARTMENT OF TRANSPORTATION · WORK ZONE TRAFFIC CONTROL

SINGLETARY MILL POND ROAD (SR 1124) OFF-SITE DETOUR AND DETOUR SIGNS

2/7/2019
O:\Transportation\Roadway\NCDOT\Division06\17BP.6.R.73\Traffic\TrafficControl\TCP\17BP6R73 - TCP 03 - OPTION 1.dgn
User:ACEY709

DocuSign Envelope ID: FC31CD4A-9FF7-4E0D-AAF7-4E05DE10D202

PROJECT: 17BP.6.R.73

CONTRACT: DF00249

PROJECT REFERENCE NO.	SHEET NO.
17BP.6.R.73	PMP-1

APPROVED: DocuSigned by: Melissa Toth — DB6DCF8E04D04AF...

DATE: 10/28/2021

SEAL

NORTH CAROLINA PROFESSIONAL SEAL 025892 ENGINEER MELISSA B. TOTH

DOCUMENT NOT CONSIDERED FINAL UNLESS ALL SIGNATURES COMPLETED

STATE OF NORTH CAROLINA
DEPARTMENT OF TRANSPORTATION

PAVEMENT MARKING PLAN

BLADEN COUNTY

LOCATION: BRIDGE NO. 08175 SINGLETARY MILL POND ROAD (SR 1124) OVER BOOTS SWAMP

INDEX

SHEET NO.	DESCRIPTION
PMP-1	PAVEMENT MARKING PLAN TITLE AND SCHEDULE SHEET
PMP-2	PAVEMENT MARKING DETAIL

ROADWAY STANDARD DRAWING

THE FOLLOWING ROADWAY STANDARDS AS APPEAR IN "ROADWAY STANDARD DRAWINGS" - PROJECT SERVICES UNIT - N.C. DEPARTMENT OF TRANSPORTATION - RALEIGH, N.C., DATED JANUARY 2018 ARE APPLICABLE TO THIS PROJECT AND BY REFERENCE HEREBY ARE CONSIDERED A PART OF THESE PLANS:

STD. NO.	TITLE
1205.01	PAVEMENT MARKINGS - LINE TYPES AND OFFSETS
1205.02	PAVEMENT MARKINGS - TWO-LANE AND MULTILANE ROADWAYS
1205.12	PAVEMENT MARKINGS - BRIDGES
1250.01	RAISED PAVEMENT MARKERS - INSTALLATION SPACING
1251.01	RAISED PAVEMENT MARKERS - PERMANENT AND TEMPORARY
1261.01	GUARDRAIL AND BARRIER DELINEATORS - INSTALLATION SPACING
1261.02	GUARDRAIL AND BARRIER DELINEATORS - TYPES AND MOUNTING
1262.01	GUARDRAIL END DELINEATION
1264.02	OBJECT MARKERS - INSTALLATION

SUMMARY OF QUANTITIES

ITEM NO. DESC. NO.	ITEM NO. SECT. NO.	ITEM DESCRIPTION	QUANTITY	UNIT
4685000000	1205	THERMOPLASTIC PAVEMENT MARKING LINES (4", 90 MILS)	1860	LF
4900000000	1251	PERMANENT RAISED MARKER	12	EA

GENERAL NOTES

THE FOLLOWING GENERAL NOTES APPLY AT ALL TIMES FOR THE DURATION OF THE CONSTRUCTION PROJECT, EXCEPT WHEN OTHERWISE NOTED IN THE PLAN, OR DIRECTED BY THE ENGINEER.

A) INSTALL PAVEMENT MARKINGS AND PAVEMENT MARKERS ON THE FINAL SURFACE AS FOLLOWS:

ROAD NAME	MARKING	MARKER
SR 1124 (SINGLETARY MILL POND RD)	THERMOPLASTIC	PERMANENT RAISED

B) TIE PROPOSED PAVEMENT MARKING LINES TO EXISTING PAVEMENT MARKING LINES.

C) REMOVE/REPLACE ANY CONFLICTING/DAMAGED PAVEMENT MARKINGS AND MARKERS.

D) PASSING ZONES WILL BE DETERMINED IN THE FIELD AND MUST BE APPROVED BY THE ENGINEER.

PAVEMENT MARKING SCHEDULE

SYMBOL	DESCRIPTION	
T1	WHITE EDGELINE	THERMOPLASTIC (4", 90 MILS)
T13	YELLOW DOUBLE CENTER	THERMOPLASTIC (4", 90 MILS)
MA	YELLOW & YELLOW	PERMANENT RAISED MARKER

PLAN SUBMITTED TO: N.C.D.O.T. SIGNING AND DELINEATION UNIT

_____ SIGNING & DELINEATION STANDARDS ENGINEER

_____ SIGNING & DELINEATION PROJECT DESIGN ENGINEER

STATE OF NORTH CAROLINA DEPARTMENT OF TRANSPORTATION

PLAN PREPARED BY: ATKINS

MELISSA B. TOTH, PE PROJECT ENGINEER

MILTON ACEVEDO, EI PROJECT DESIGN ENGINEER

ATKINS
1616 EAST MILLBROOK ROAD, SUITE 160
RALEIGH, NORTH CAROLINA 27609
(919) 876-6888 NCBEES #F-0326

28-OCT-2021 15:23
O:\Projects\Plans\NCDOT\Division06\17BP.6.R.73\Traffic\PMP\PMP 01 REV 10.14.21.dgn
ACEVMILTON AT LM3316839

DocuSign Envelope ID: FC31CD4A-9FF7-4E0D-AAF7-4E05DE10D202

PROJECT REFERENCE NO.	SHEET NO.
17BP.6.R.73	PMP-2

APPROVED: DocuSigned by: Melissa Toth D86DCFBE4D04AF...

DATE: 10/28/2021

SEAL

NORTH CAROLINA PROFESSIONAL SEAL 025892 ENGINEER MELISSA B. TOTH

DOCUMENT NOT CONSIDERED FINAL UNLESS ALL SIGNATURES COMPLETED

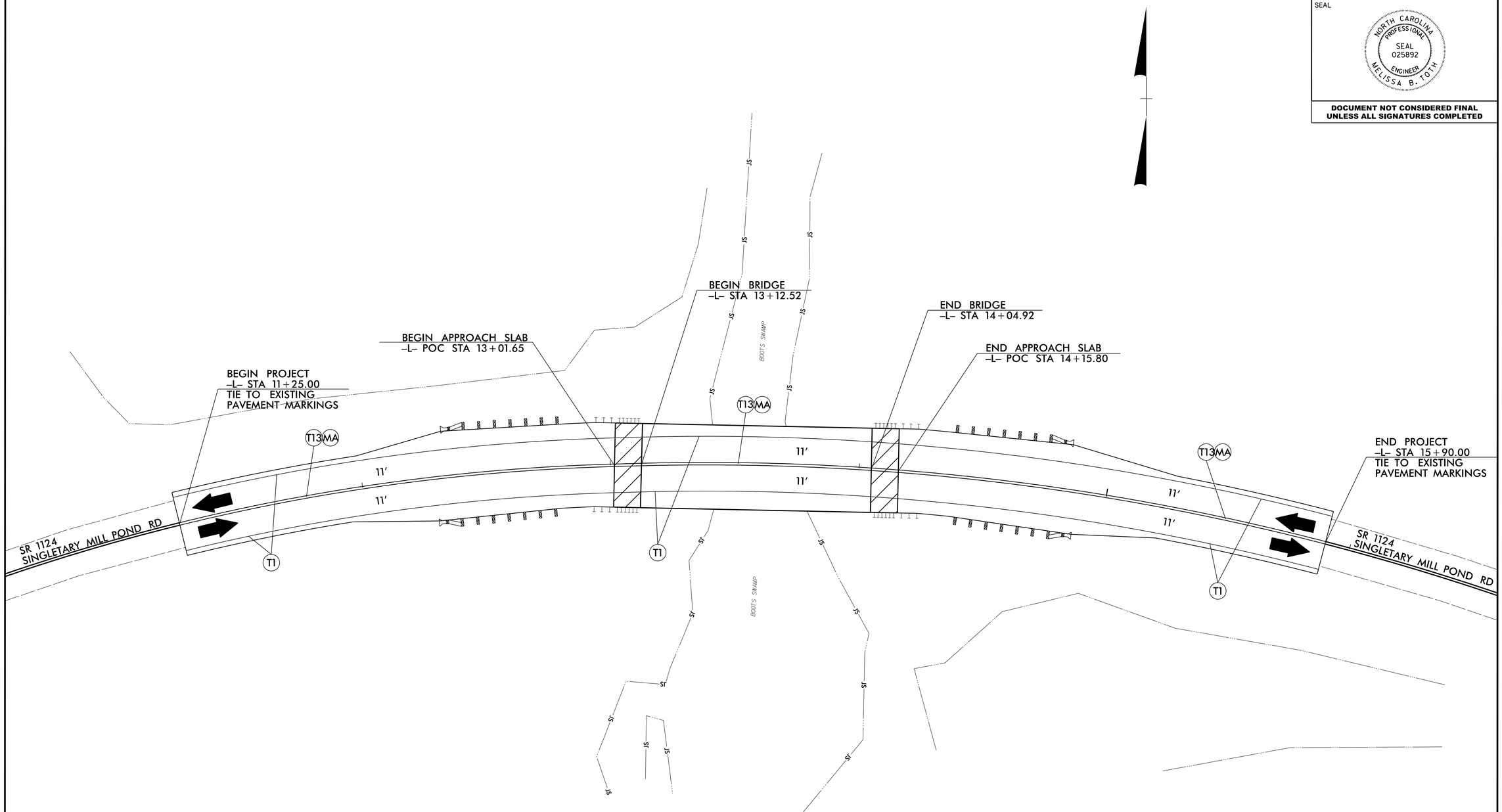

ATKINS 1616 EAST MILLBROOK ROAD, SUITE 160
RALEIGH, NORTH CAROLINA 27609
(919) 876-6888 NCBEES #F-0326

PAVEMENT MARKING
-L- STA. 11+25 TO STA. 15+90

27-OCT-2021 10:47
O:\Production\Trans\NCDOT\Division06\17BP.6.R.73\Traffic\PMP\PMP 02 REV 10.15.21.dgn
ACEV7019 AT LUS315839

TIP PROJECT: 17BP.6.R.73

STATE	STATE PROJECT REFERENCE NO.	SHEET NO.	TOTAL SHEETS
N.C.	17BP.6.R.73	EC-1	4

STATE PROJ. NO.	F.A. PROJ. NO.	DESCRIPTION
17BP.6.R.73		PE
17BP.6.R.73		R/W, UTIL.
17BP.6.R.73		CONSTR.

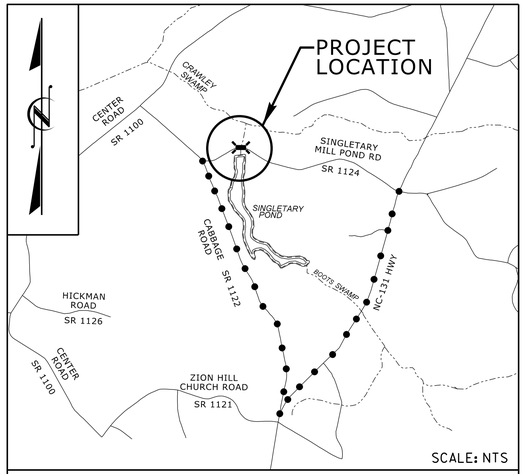

VICINITY MAP

OFF-SITE DETOUR

STATE OF NORTH CAROLINA
DIVISION OF HIGHWAYS

PLAN FOR PROPOSED HIGHWAY EROSION CONTROL

BLADEN COUNTY

LOCATION: BRIDGE NO. 080175 SINGLETARY MILL POND ROAD (SR 1124) OVER CRAWLEY CREEK

TYPE OF WORK: WIDENING, GRADING, PAVING, DRAINAGE, AND STRUCTURE

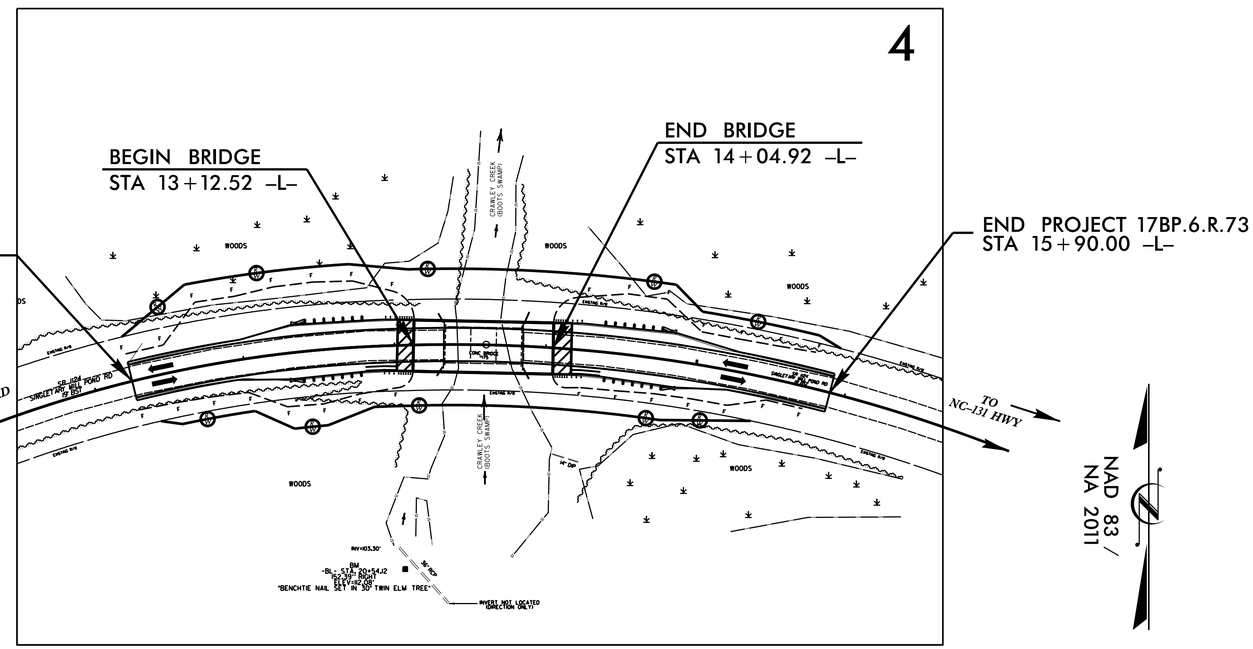

NAD 83 / NA 2011

EROSION AND SEDIMENT CONTROL MEASURES

Std. #	Description	Symbol
1630.03	Temporary Silt Ditch	TSD
1630.05	Temporary Diversion	TD
1605.01	Temporary Silt Fence	
1606.01	Special Sediment Control Fence	
1622.01	Temporary Berms and Slope Drains	
1630.02	Silt Basin Type B	
1633.01	Temporary Rock Silt Check Type-A	
	Temporary Rock Silt Check Type-A with Matting and Polyacrylamide (PAM)	
1633.02	Temporary Rock Silt Check Type-B	
	Wattle / Coir Fiber Wattle	SW CFW
	Wattle / Coir Fiber Wattle with Polyacrylamide (PAM)	
1634.01	Temporary Rock Sediment Dam Type-A	
1634.02	Temporary Rock Sediment Dam Type-B	
1635.01	Rock Pipe Inlet Sediment Trap Type-A	
1635.02	Rock Pipe Inlet Sediment Trap Type-B	
1630.04	Stilling Basin	
1630.06	Special Stilling Basin	
	Rock Inlet Sediment Trap:	
1632.01	Type A	A
1632.02	Type B	B
1632.03	Type C	C
	Skimmer Basin	
	Tiered Skimmer Basin	
	Infiltration Basin	

THIS PROJECT CONTAINS EROSION CONTROL PLANS FOR CLEARING AND GRUBBING PHASE OF CONSTRUCTION.

GRAPHIC SCALE

20

PLANS

0

PROFILE (HORIZONTAL)

0

PROFILE (VERTICAL)

THESE EROSION AND SEDIMENT CONTROL PLANS COMPLY WITH THE REGULATIONS SET FORTH BY THE NCG-010000 GENERAL CONSTRUCTION PERMIT EFFECTIVE AUGUST 1, 2016 AND ISSUED BY THE NORTH CAROLINA DEPARTMENT OF ENVIRONMENTAL QUALITY DIVISION OF WATER RESOURCES.

Prepared In the Office of:

1998 20 2018
ALPHA & OMEGA GROUP
CIVIL | STRUCTURAL | WATER RESOURCES

4601 Lake Boone Trail Suite 3C Raleigh, NC 27607
Phone 919 981 0310 Fax 919 981 0451
www.aogroup.com Firm License No. C-1684

Designed by:

Jeffrey D. Goodin — NAME
3023 — LEVEL III CERTIFICATION NO.

Reviewed In the Office of:

ROADSIDE ENVIRONMENTAL UNIT

1 South Wilmington St.
Raleigh, NC 27611

2018 STANDARD SPECIFICATIONS

Reviewed by:

Mark Staley, CPESC, CPSWQ

Roadway Standard Drawings

The following roadway english standards as appear in "Roadway Standard Drawings"– Roadway Design Unit – N. C. Department of Transportation – Raleigh, N. C., dated January 2018 and the latest revison thereto are applicable to this project and by reference hereby are considered a part of these plans.

1604.01	Railroad Erosion Control Detail	1632.01	Rock Inlet Sediment Trap Type A
1605.01	Temporary Silt Fence	1632.02	Rock Inlet Sediment Trap Type B
1606.01	Special Sediment Control Fence	1632.03	Rock Inlet Sediment Trap Type C
1607.01	Gravel Construction Entrance	1633.01	Temporary Rock Silt Check Type A
1622.01	Temporary Berms and Slope Drains	1633.02	Temporary Rock Silt Check Type B
1630.01	Riser Basin	1634.01	Temporary Rock Sediment Dam Type A
1630.02	Silt Basin Type B	1634.02	Temporary Rock Sediment Dam Type B
1630.03	Temporary Silt Ditch	1635.01	Rock Pipe Inlet Sediment Trap Type A
1630.04	Stilling Basin	1635.02	Rock Pipe Inlet Sediment Trap Type B
1630.05	Temporary Diversion	1640.01	Coir Fiber Baffle
1630.06	Special Stilling Basin	1645.01	Temporary Stream Crossing
1631.01	Matting Installation		

>>>>SYSTIME$$$$
>>>>DATE$$$$
>>>>USERNAME$$$$
>>>>DGN$$$$

PROJECT REFERENCE NO.	SHEET NO.
I7BP.6.R.73	EC-2
R/W SHEET NO.	
ROADWAY DESIGN ENGINEER	HYDRAULICS ENGINEER

SILT FENCE COIR FIBER WATTLE BREAK DETAIL

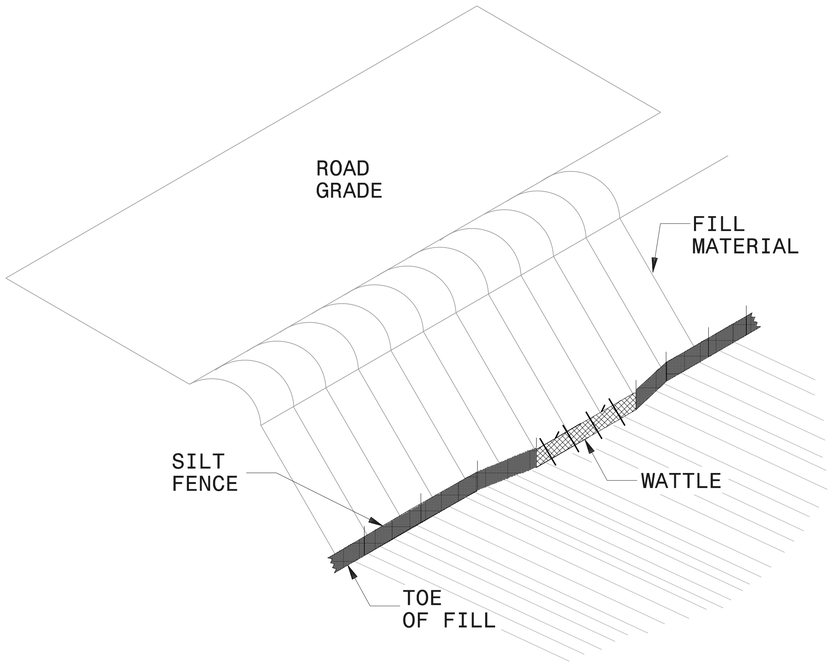

ISOMETRIC VIEW

NOTES:

USE MINIMUM 12 IN. DIAMETER COIR FIBER (COCONUT FIBER) WATTLE AND LENGTH OF 10 FT.

EXCAVATE A 1 TO 2 INCH TRENCH FOR WATTLE TO BE PLACED.

DO NOT PLACE WATTLE ON TOE OF SLOPE.

USE 2 FT. WOODEN STAKES WITH A 2 IN. BY 2 IN. NOMINAL CROSS SECTION.

INSTALL A MINIMUM OF 2 UPSLOPE STAKES AND 4 DOWNSLOPE STAKES AT AN ANGLE TO WEDGE WATTLE TO GROUND.

PROVIDE STAPLES MADE OF 0.125 IN. DIAMETER STEEL WIRE FORMED INTO A U SHAPE NOT LESS THAN 12″ IN LENGTH.

INSTALL STAPLES APPROXIMATELY EVERY 1 LINEAR FOOT ON BOTH SIDES OF WATTLE AND AT EACH END TO SECURE IT TO THE SOIL.

WATTLE INSTALLATION CAN BE ON OUTSIDE OF THE SILT FENCE AS DIRECTED.

INSTALL TEMPORARY SILT FENCE IN ACCORDANCE WITH SECTION 1605 OF THE STANDARD SPECIFICATIONS.

INSET A

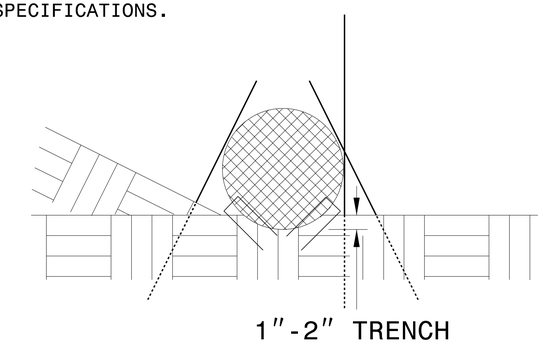

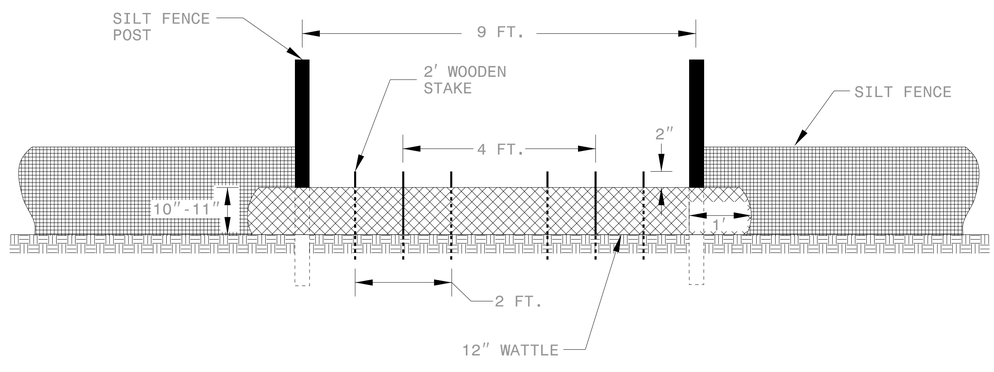

VIEW FROM SLOPE

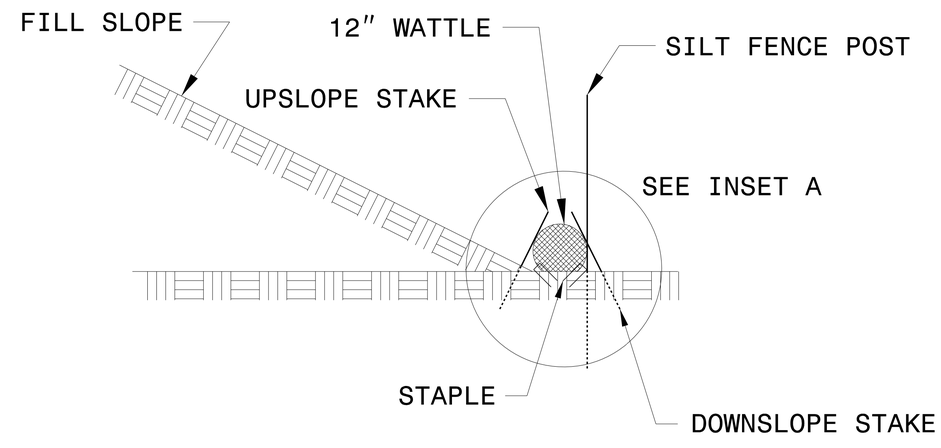

SIDE VIEW

PROJECT REFERENCE NO.	SHEET NO.
17BP.6.R.73	EC-3
ROADWAY DESIGN ENGINEER	HYDRAULICS ENGINEER

DIVISION OF HIGHWAYS
STATE OF NORTH CAROLINA

SOIL STABILIZATION TIMEFRAMES

SITE DESCRIPTION	STABILIZATION TIME	TIMEFRAME EXCEPTIONS
PERIMETER DIKES, SWALES, DITCHES AND SLOPES	7 DAYS	NONE
HIGH QUALITY WATER (HQW) ZONES	7 DAYS	NONE
SLOPES STEEPER THAN 3:1	7 DAYS	IF SLOPES ARE 10' OR LESS IN LENGTH AND ARE NOT STEEPER THAN 2:1, 14 DAYS ARE ALLOWED.
SLOPES 3:1 OR FLATTER	14 DAYS	7 DAYS FOR SLOPES GREATER THAN 50' IN LENGTH.
ALL OTHER AREAS WITH SLOPES FLATTER THAN 4:1	14 DAYS	NONE, EXCEPT FOR PERIMETERS AND HQW ZONES.

PROJECT REFERENCE NO.	SHEET NO.
17BP.6.R.73	EC-4/CONST.4
R/W SHEET NO.	
ROADWAY DESIGN ENGINEER	HYDRAULICS ENGINEER

NOTE:
PLACE TEMPORARY ROCK SEDIMENT DAMS TYPE – B AND TEMPORARY ROCK SILT CHECKS TYPE – A AT DRAINAGE OUTLETS.

NOTE:
PERIMETER EROSION CONTROL MEASURES SHALL BE INSTALLED DURING CLEARING AND GRUBBING PHASE.

NOTE:
UTILIZE SPECIAL STILLING BASIN(S) WHERE APPLICABLE.

NC GRID
NAD 83/NA 2011

-L-	
PI Sta 11+55.47	PI Sta 15+04.75
Δ = 20°19' 55.7" (RT)	Δ = 22°15' 32.4" (RT)
D = 6°56' 41.8"	D = 5°47' 14.8"
L = 292.76'	L = 384.61'
T = 147.94'	T = 194.76'
R = 825.00'	R = 990.00'
SE = .04	SE = .04
*DS = 45MPH	*DS = 50MPH

*DESIGN EXCEPTION REQUIRED FOR HORIZONTAL STOPPING SIGHT DISTANCE

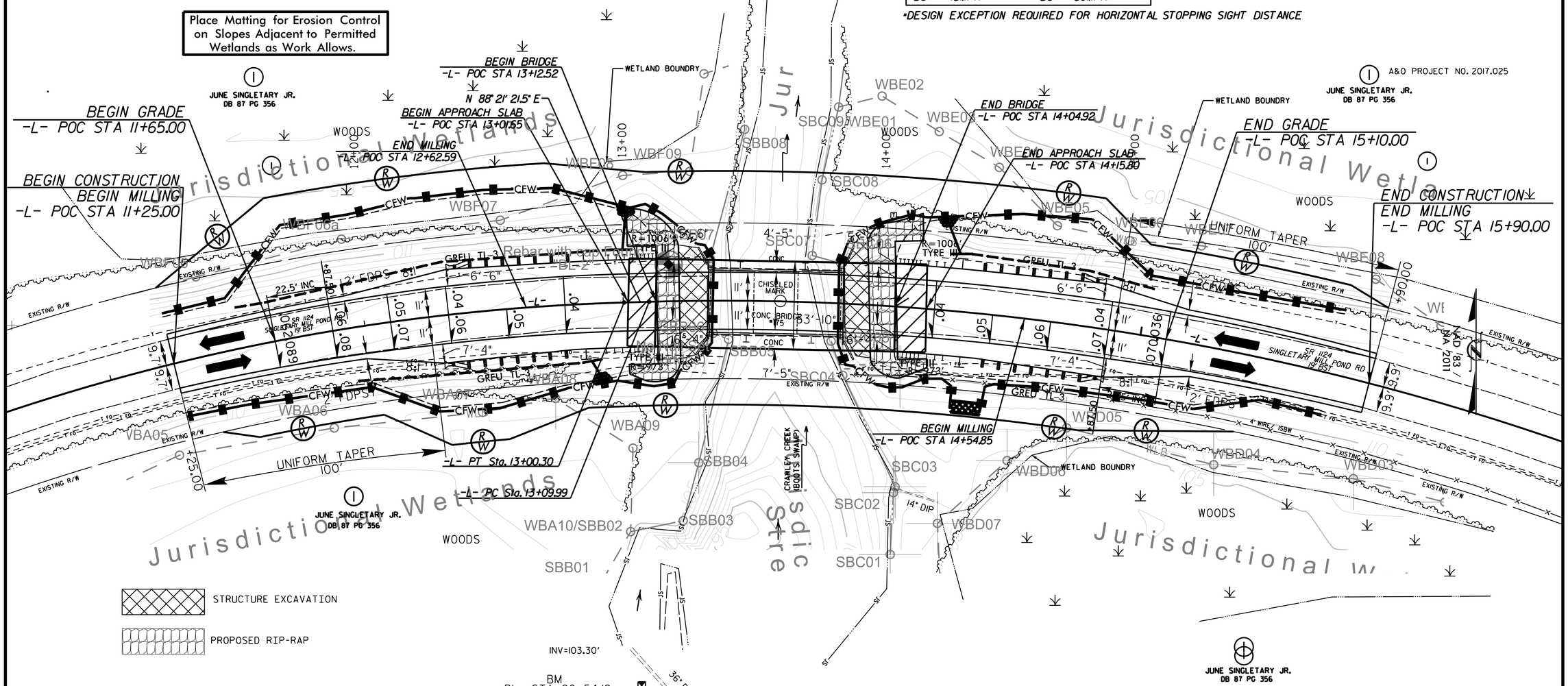

PAVED SHOULDER

SEE SHEET 5 FOR PROFILE VIEW

SEE SHEET S-1 THRU S-X FOR STRUCTURE PLANS

STATE	STATE PROJECT REFERENCE NO.	SHEET NO.	TOTAL SHEETS
N.C.	17BP.6.R.73	UO-1	2

STATE OF NORTH CAROLINA
DIVISION OF HIGHWAYS

BLADEN COUNTY

LOCATION: BRIDGE NO. 080175 SINGLETARY MILL POND ROAD (SR 1124) OVER BOOTS SWAMP

TYPE OF WORK: WIDENING, GRADING, PAVING, DRAINAGE, AND STRUCTURE

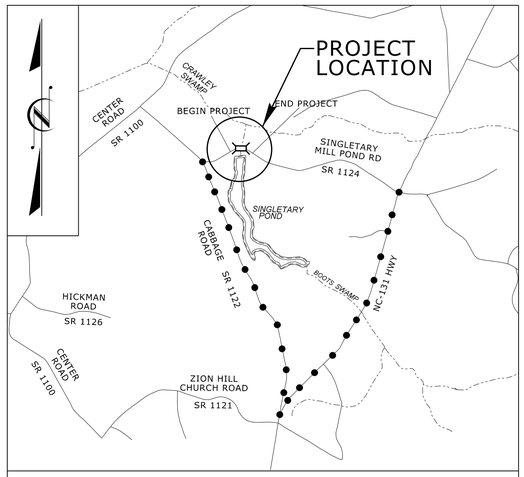

VICINITY MAP

OFF-SITE DETOUR

NAD 83 / NA 2011

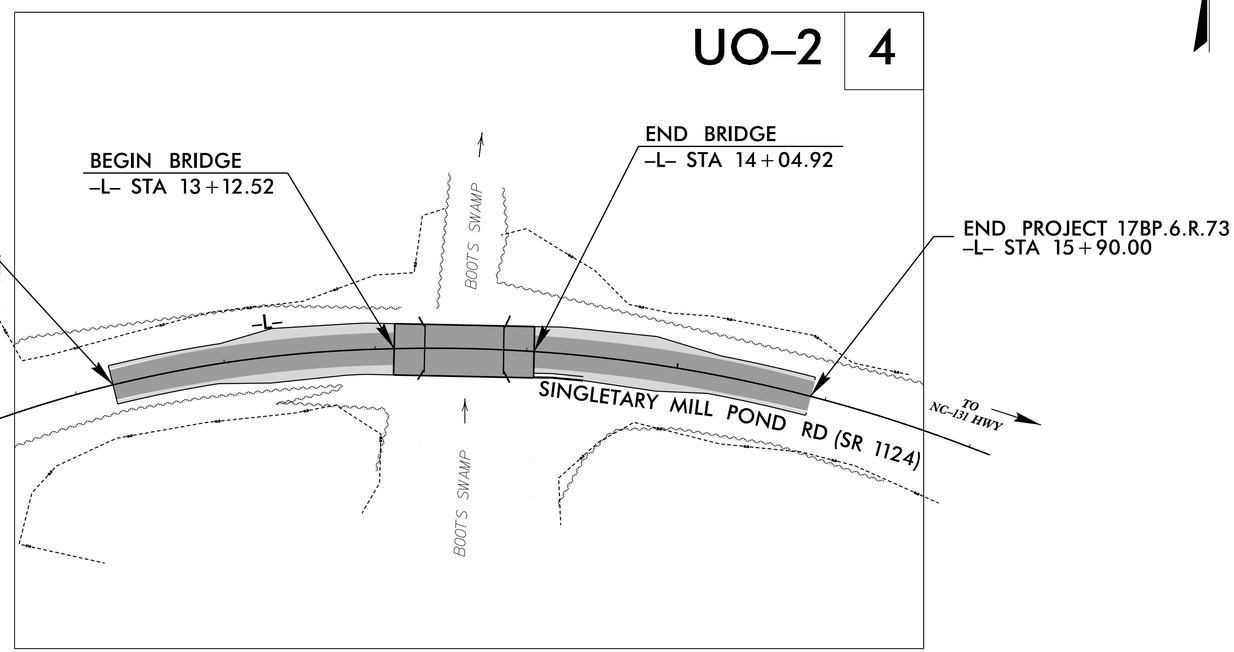

GRAPHIC SCALES

20 10 0 20 40
PLANS

20 10 0 20 40
PROFILE (HORIZONTAL)

4 2 0 4 8
PROFILE (VERTICAL)

INDEX OF UTILITY SHEETS

SHEET NO.	DESCRIPTION
UO–1	TITLE SHEET
UO–2	UTILITY PLAN SHEETS

Prepared in the Office of:
ATKINS
1616 E. MILLBROOK ROAD, SUITE #160
RALEIGH, NORTH CAROLINA 27609
(919) 876–6888 NCBEES #F–0326

2012 STANDARD SPECIFICATIONS

RIGHT OF WAY DATE:
JULY 27, 2018

LETTING DATE:
FEBRUARY 2, 2022

BRUCE PAYNE, P.E.
PROJECT ENGINEER

DANA PACZEK, P.E.
PROJECT DESIGN ENGINEER

CHRISTY WRIGHT HUFF, P.E.
NCDOT CONTACT

UTILITY OWNERS

COMMUNICATIONS – STAR COMMUNICATIONS

DIVISION OF HIGHWAYS STATE OF NORTH CAROLINA

PROJECT: 17BP.6.R.73

CONTRACT: DF00249

09/08/99

08-NOV-2021 09:53
R:\Utilities\17BP.6.R.73_rdy_tsh_UO-1.dgn
$$$$USERNAME$$$$

PROJECT REFERENCE NO.	SHEET NO.
17BP.6.R.73	U0-2

NC GRID
NAD 83/NA 2011

-L-	
PI Sta 11+55.47	PI Sta 15+04.75
△ = 20° 19' 55.7" (RT)	△ = 22° 15' 32.4" (RT)
D = 6° 56' 41.8"	D = 5° 47' 14.8"
L = 292.76'	L = 384.61'
T = 147.94'	T = 194.76'
R = 825.00'	R = 990.00'
SE = .04	SE = .04
*DS = 45MPH	*DS = 50MPH

*DESIGN EXCEPTION REQUIRED FOR HORIZONTAL STOPPING SIGHT DISTANCE

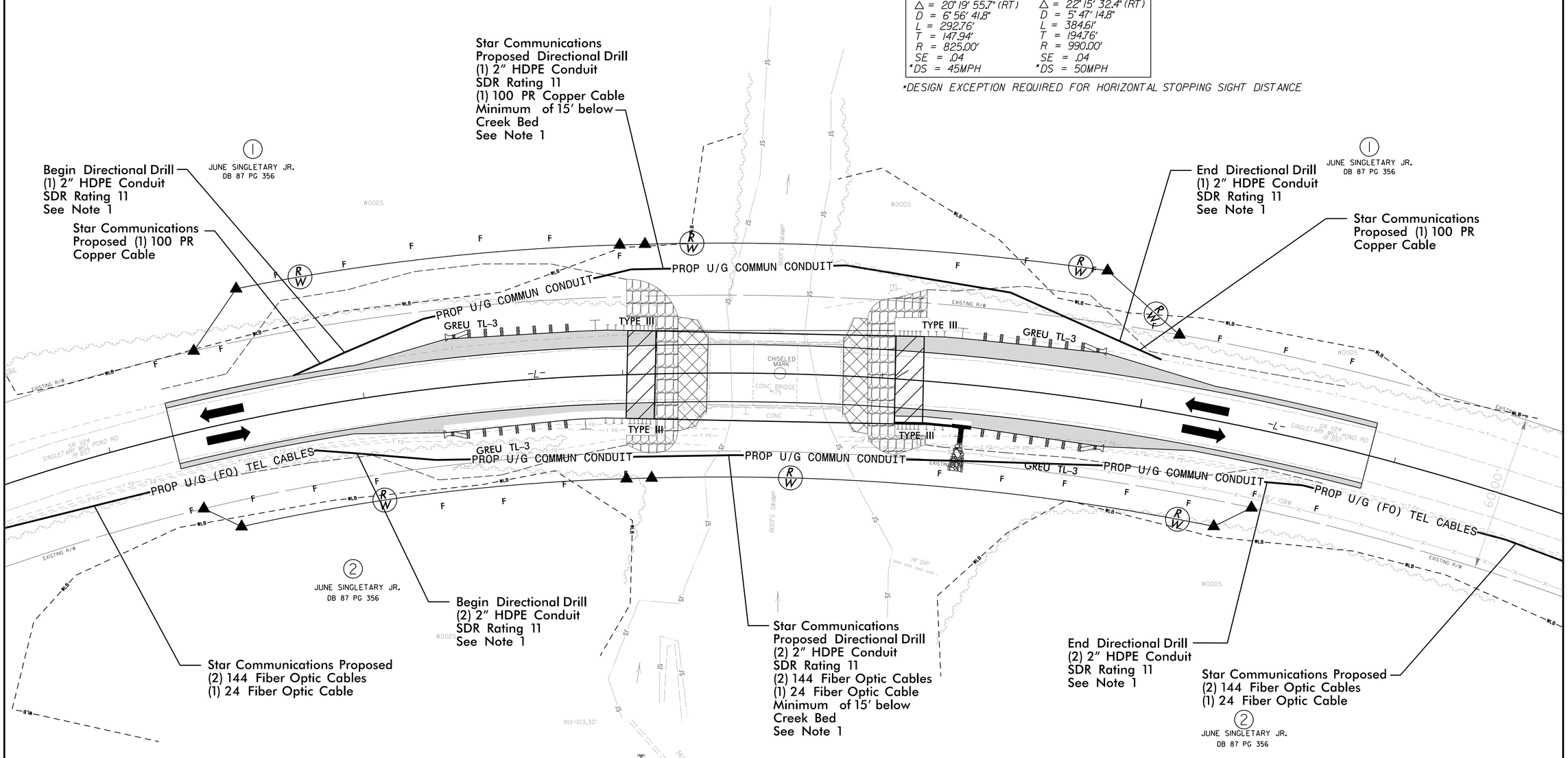

NOTE 1: ALL DIRECTIONAL DRILLING WORK WILL BE PERFORMED OUTSIDE OF THE EXISTING WETLAND BOUNDARY

PAVED SHOULDER

SEE SHEET 5 FOR PROFILE VIEW

SEE SHEET S-1THRU S-X FOR STRUCTURE PLANS

5/14/99

21-DEC-2018 16:41
R:\Utilities\Archive\17BP.6.R.73_rdy_psh_U0-2.dgn
$$$$USERNAME$$$$

PROJ. REFERENCE NO.	SHEET NO.
17BP.6.R.73	X–1A

STATE OF NORTH CAROLINA
DIVISION OF HIGHWAYS

CROSS SECTON INDEX SHEET

Chain	Beg Sta	End Sta	LOC	Sheet No.	Comments / Log File
-L-	10+75	16+50		X-1 TO X-8	

Chain	Beg Sta	End Sta	LOC	Sheet No.	Comments / Log File

PROJ. REFERENCE NO.	SHEET NO.
17BP.6.R.73	X–1B

STATE OF NORTH CAROLINA
DIVISION OF HIGHWAYS

NOTE: Embankment does not include backfill for undercut.

CROSS-SECTION SUMMARY

Station	Uncl. Exc.	Undercut	Embt	Station	Uncl. Exc.	Undercut	Embt	Station	Uncl. Exc.	Undercut	Embt	Station	Uncl. Exc.	Undercut	Embt
-L-	(cu. yd.)	(cu. yd.)	(cu. yd.)		(cu. yd.)	(cu. yd.)	(cu. yd.)		(cu. yd.)	(cu. yd.)	(cu. yd.)		(cu. yd.)	(cu. yd.)	(cu. yd.)
11+25.00	0	0	0												
11+50.00	2	0	4												
11+75.00	2	0	16												
12+00.00	2	0	25												
12+25.00	1	0	36												
12+50.00	0	0	55												
12+75.00	0	0	59												
13+00.00	0	0	53												
13+12.59	0	0	25												
13+25.00	0	0	0												
13+50.00	0	0	0												
13+75.00	0	0	0												
14+00.00	0	0	0												
14+04.85	0	0	0												
14+25.00	0	0	18												
14+50.00	3	0	31												
14+75.00	5	0	35												
15+00.00	4	0	18												
15+25.00	3	0	4												
15+50.00	2	0	4												
15+75.00	2	0	3												
15+90.00	1	0	1												

NOTE: Approximate quantities only. Unclassified Excavation, Borrow Excavation, Shoulder Borrow, Fine Grading, Clearing and Grubbing, and Removal of Existing Pavement will be paid for at the contract lump sum price for "Grading".

0 2.5 5	PROJ. REFERENCE NO.	SHEET NO.
	17BP.6.R.73	X-1

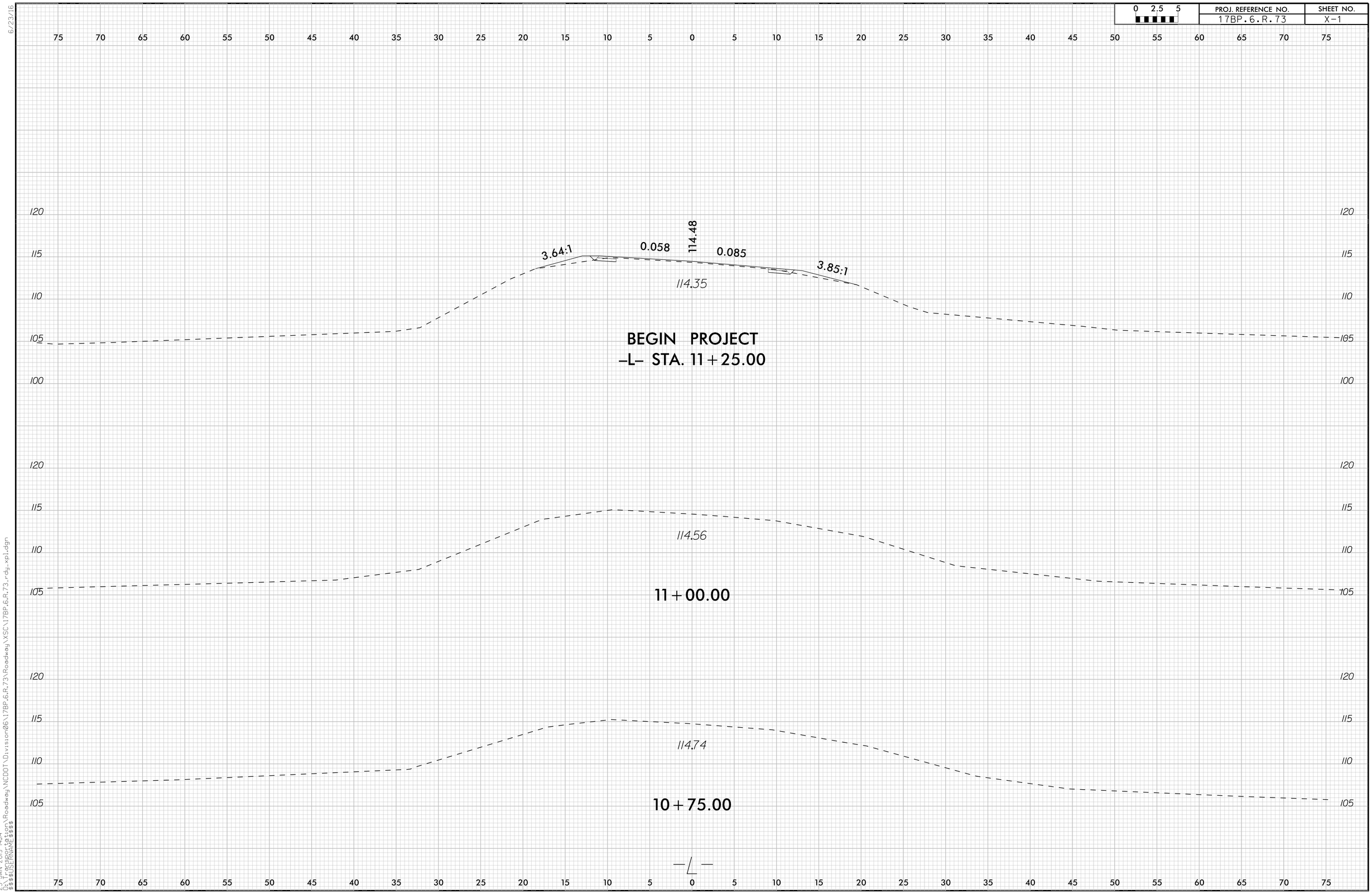

6/23/16
23-JAN-2019 14:14
C:\Users\rbrown\AppData\Local\Temp\Roadway\NCDOT\Division06\17BP.6.R.73\Roadway\XSC\17BP.6.R.73_rdy_xpl.dgn
$$$$USERNAME$$$$

6/23/16

0 2.5 5	PROJ. REFERENCE NO.	SHEET NO.
	17BP.6.R.73	X-2

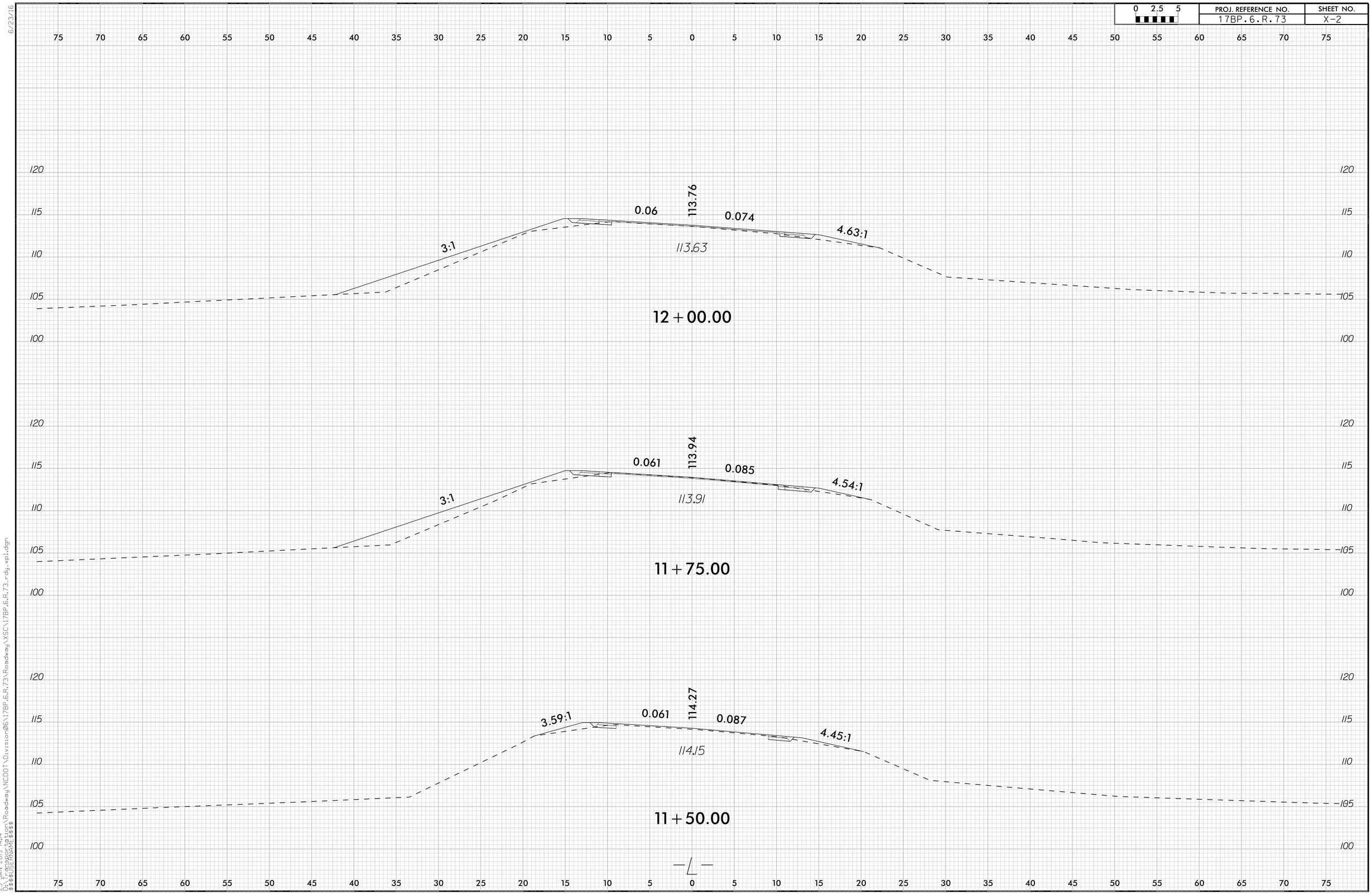

23-JAN-2019 14:14
O:\PROJECT\Division\Roadway\NCDOT\Division06\17BP.6.R.73\Roadway\XSC\17BP.6.R.73_rdy_xp1.dgn
$$$$USERNAME$$$$

0 2.5 5	PROJ. REFERENCE NO.	SHEET NO.
	17BP.6.R.73	X-3

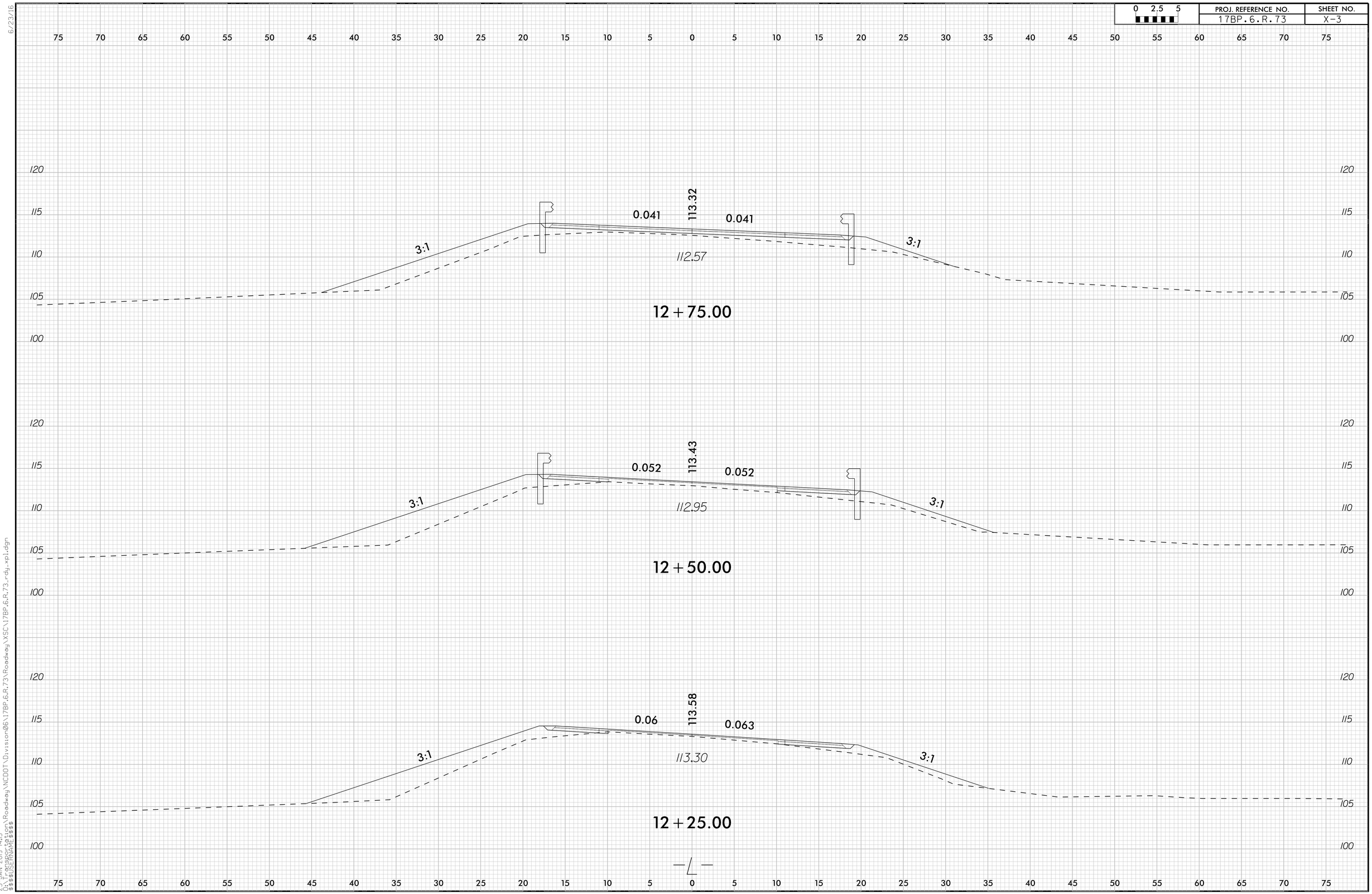

6/23/16

23-JAN-2019 14:15
C:\Users\tbrown\Desktop\Division06\17BP.6.R.73\Roadway\NCDOT\Division06\17BP.6.R.73\Roadway\XSC\17BP.6.R.73_rdy_xpl.dgn
$$$$USERNAME$$$$

0 2.5 5	PROJ. REFERENCE NO.	SHEET NO.
	17BP.6.R.73	X-4

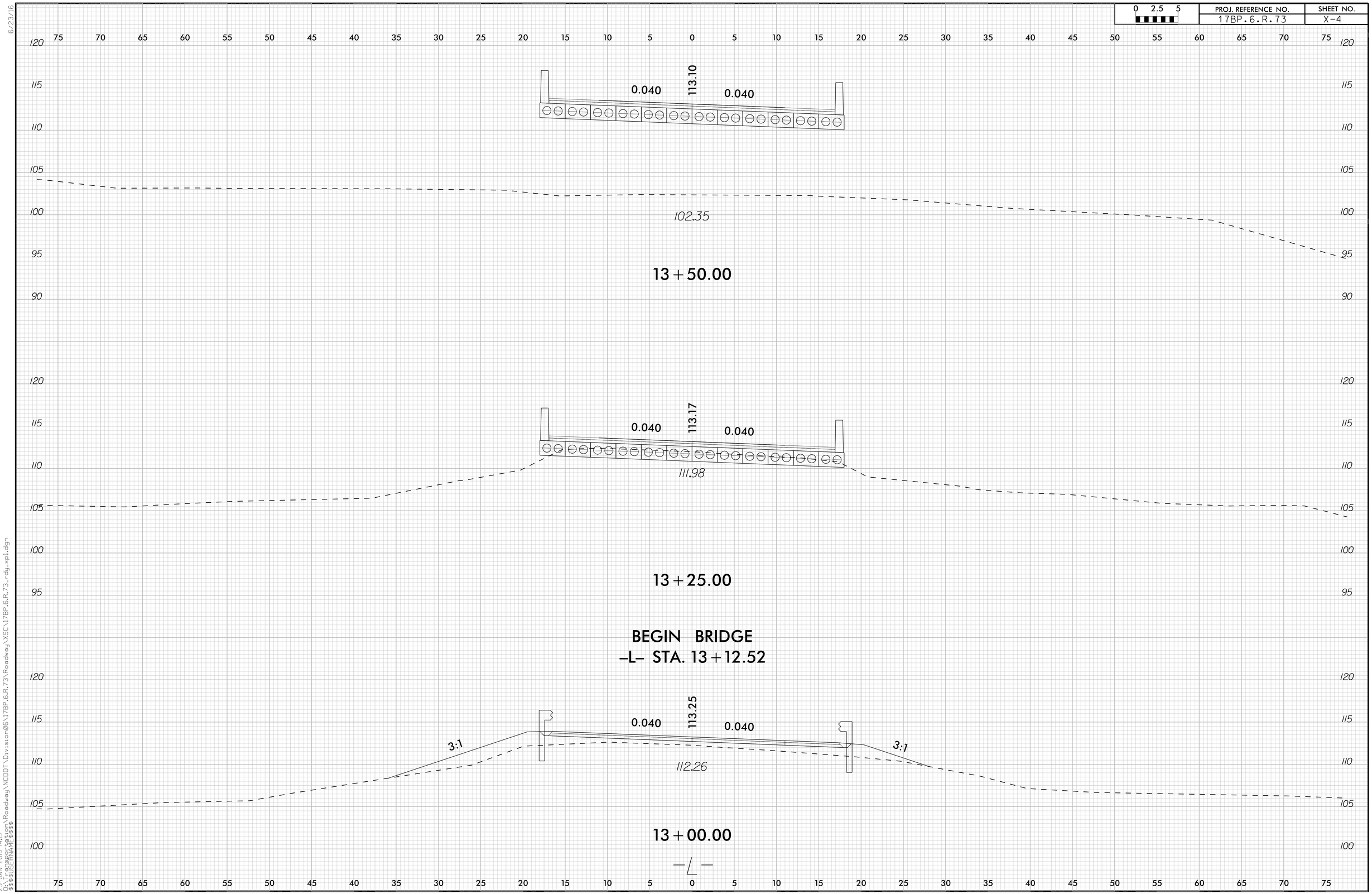

6/23/16
23-JAN-2019 14:15
C:\Users\rdy\AppData\Local\Temp\RDY_XPL_17BP.6.R.73_X_Roadway.dgn
$$$$USERNAME$$$$
C:\NCDOT\Division06\17BP.6.R.73\Roadway\XSC\17BP.6.R.73_rdy_xpl.dgn

0 2.5 5	PROJ. REFERENCE NO.	SHEET NO.
	17BP.6.R.73	X-5

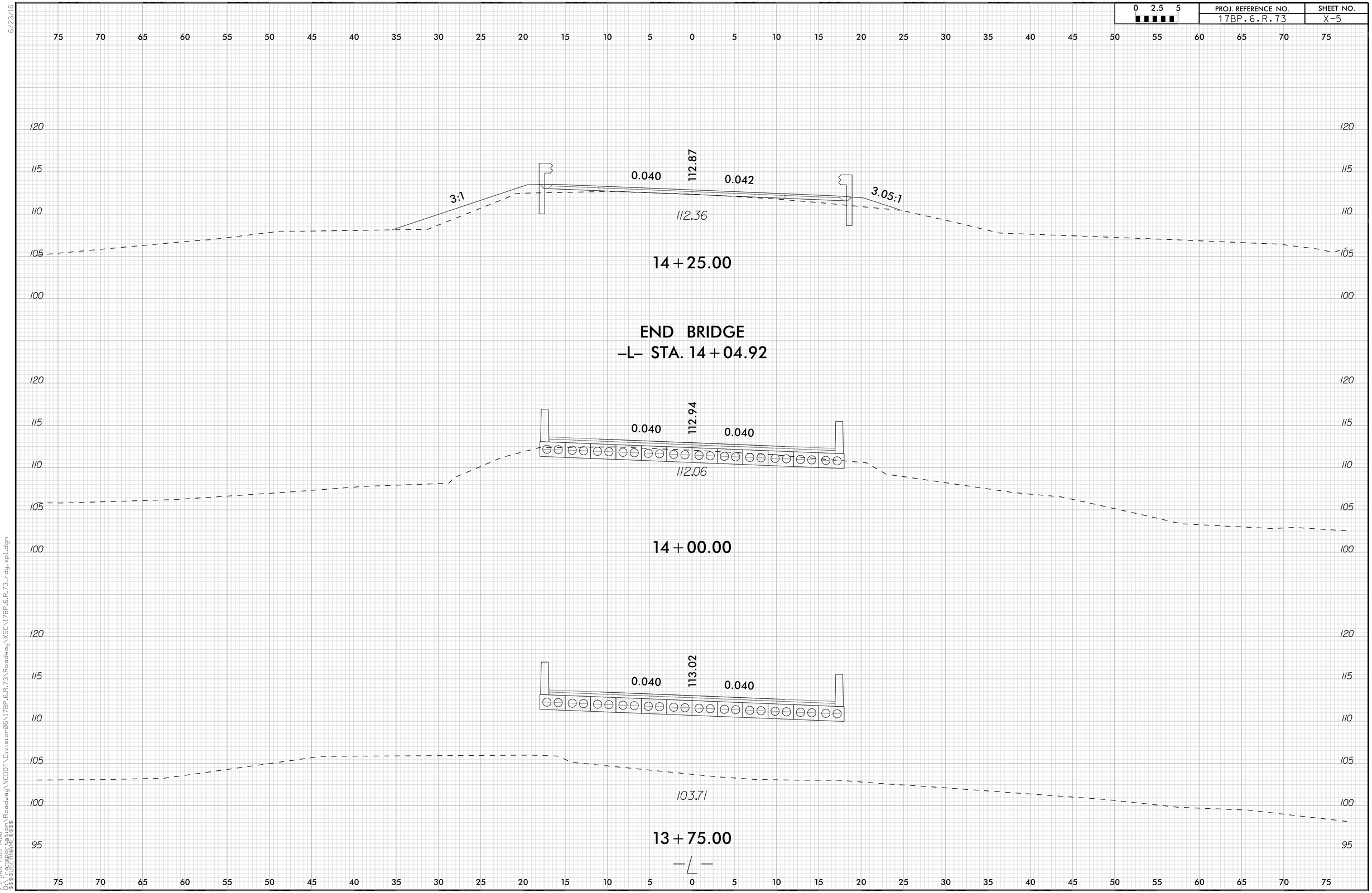

6/23/16

23-JAN-2019 14:16
C:\Users\$USERNAME$\AppData\Local\Temp\$$$$
$$$$USERNAME$$$$

N:\Roadway\NCDOT\Division06\17BP.6.R.73\Roadway\XSC\17BP.6.R.73_rdy_xpl.dgn

0 2.5 5	PROJ. REFERENCE NO.	SHEET NO.
	17BP.6.R.73	X-6

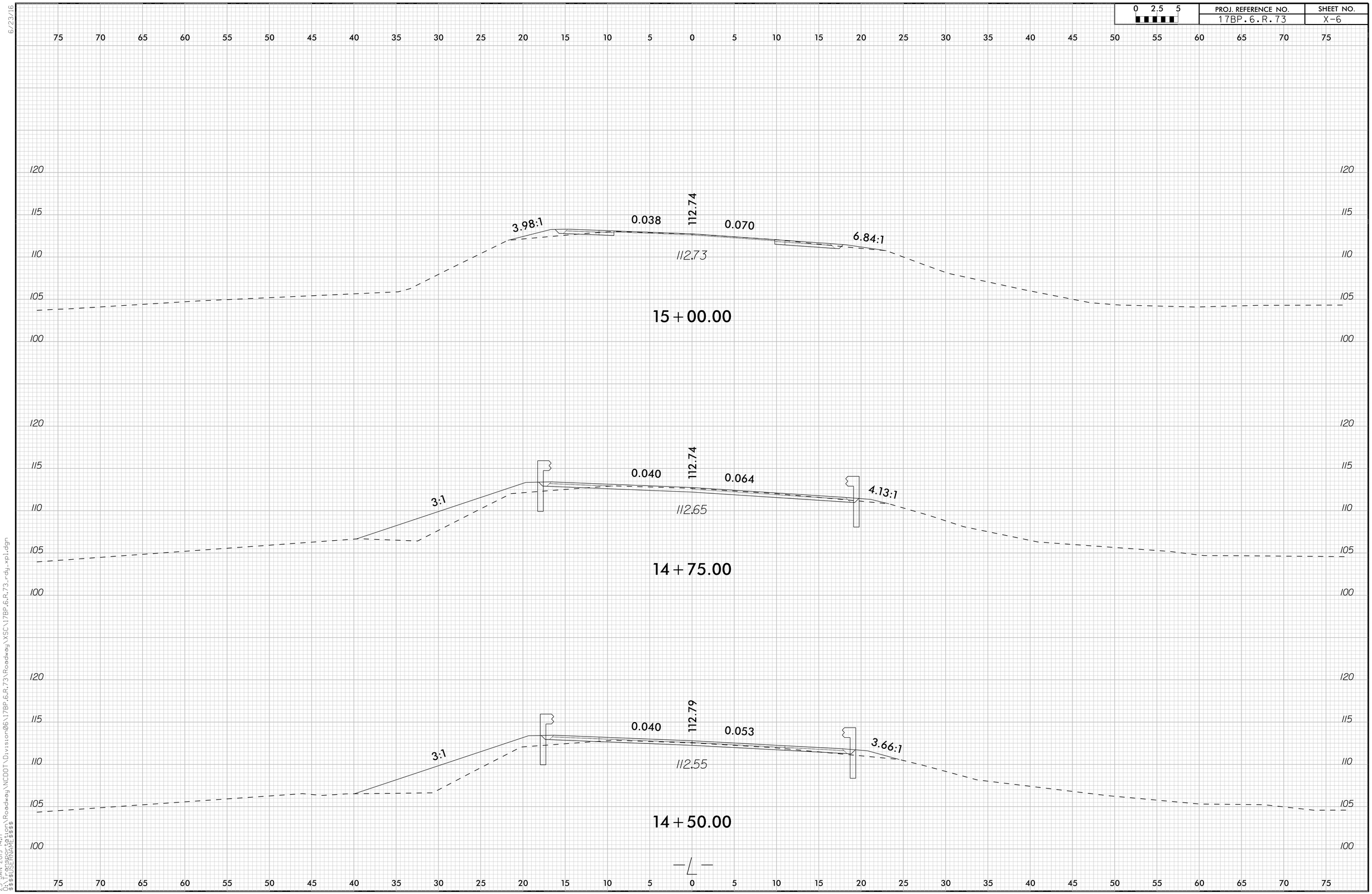

6/23/16
23-JAN-2019 14:17
C:\pwworking\division\Roadway\NCDOT\Division06\17BP.6.R.73\Roadway\XSC\17BP.6.R.73_rdy_xp1.dgn
$$$$USERNAME$$$$

0 2.5 5	PROJ. REFERENCE NO.	SHEET NO.
	17BP.6.R.73	X-7

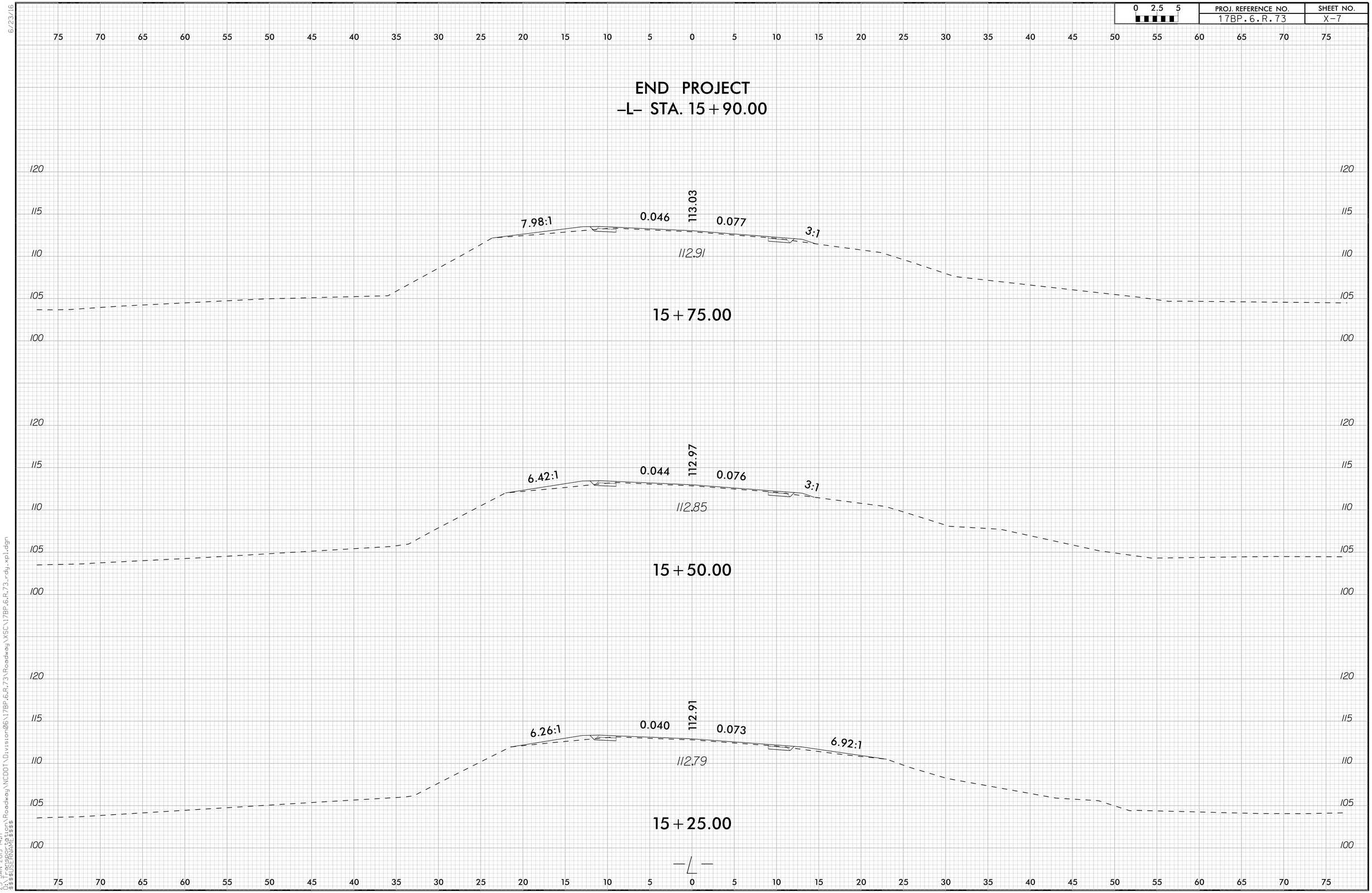

6/23/16
23-JAN-2019 14:17
O:\PROJECT\Division\Roadway\NCDOT\Division06\17BP.6.R.73\Roadway\XSC\17BP.6.R.73_rdy_xp1.dgn
$$$$USERNAME$$$$

0 2.5 5	PROJ. REFERENCE NO.	SHEET NO.
	17BP.6.R.73	X-8

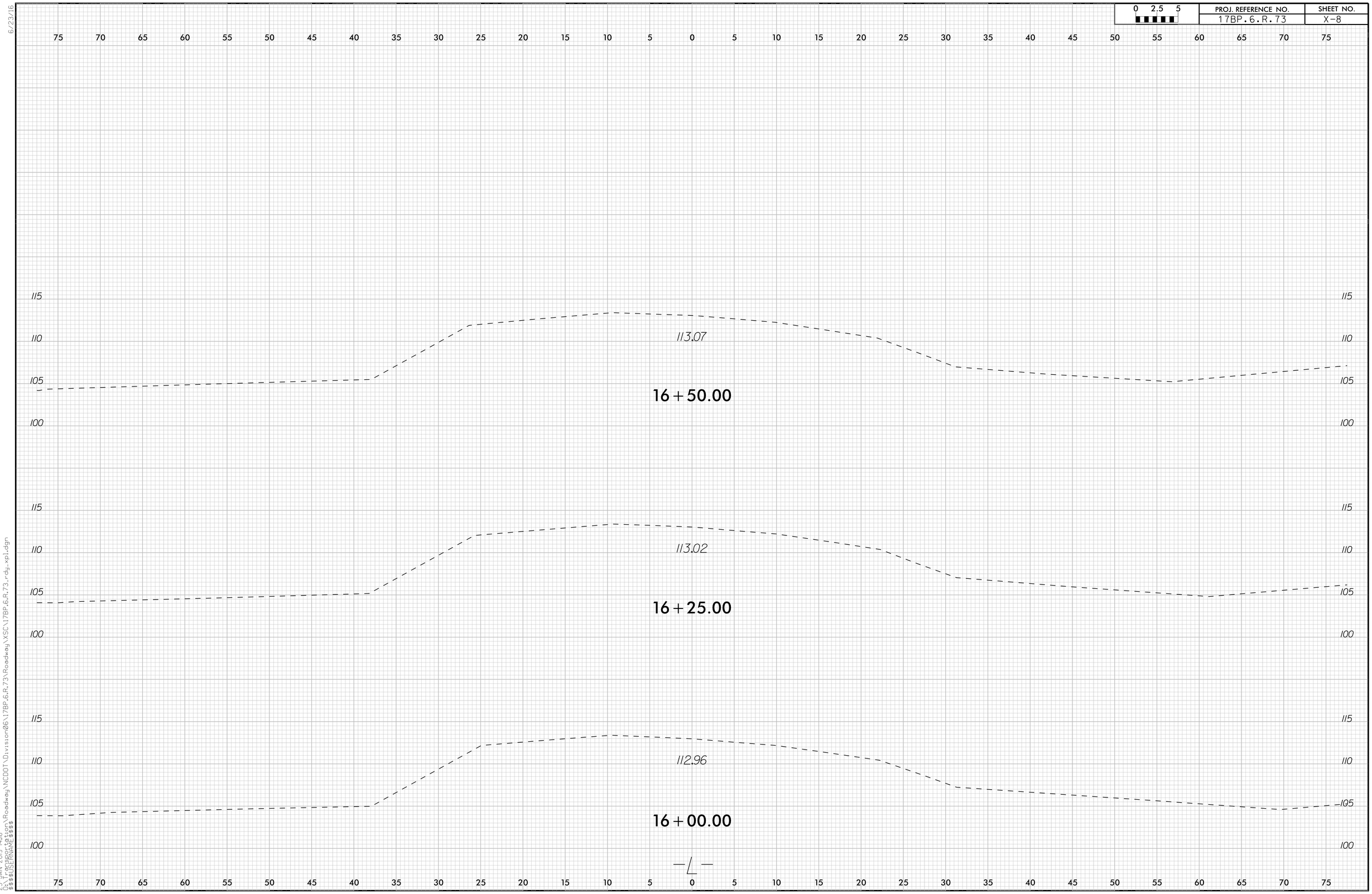

6/23/16
23-JAN-2019 14:18
C:\Users\rpowell\Desktop\Roadway\NCDOT\Division06\17BP.6.R.73\Roadway\XSC\17BP.6.R.73_rdy_xpl.dgn
$$$$USERNAME$$$$

DocuSign Envelope ID: 493887AB-7D69-4DB1-B0E8-8FB86D1DC895

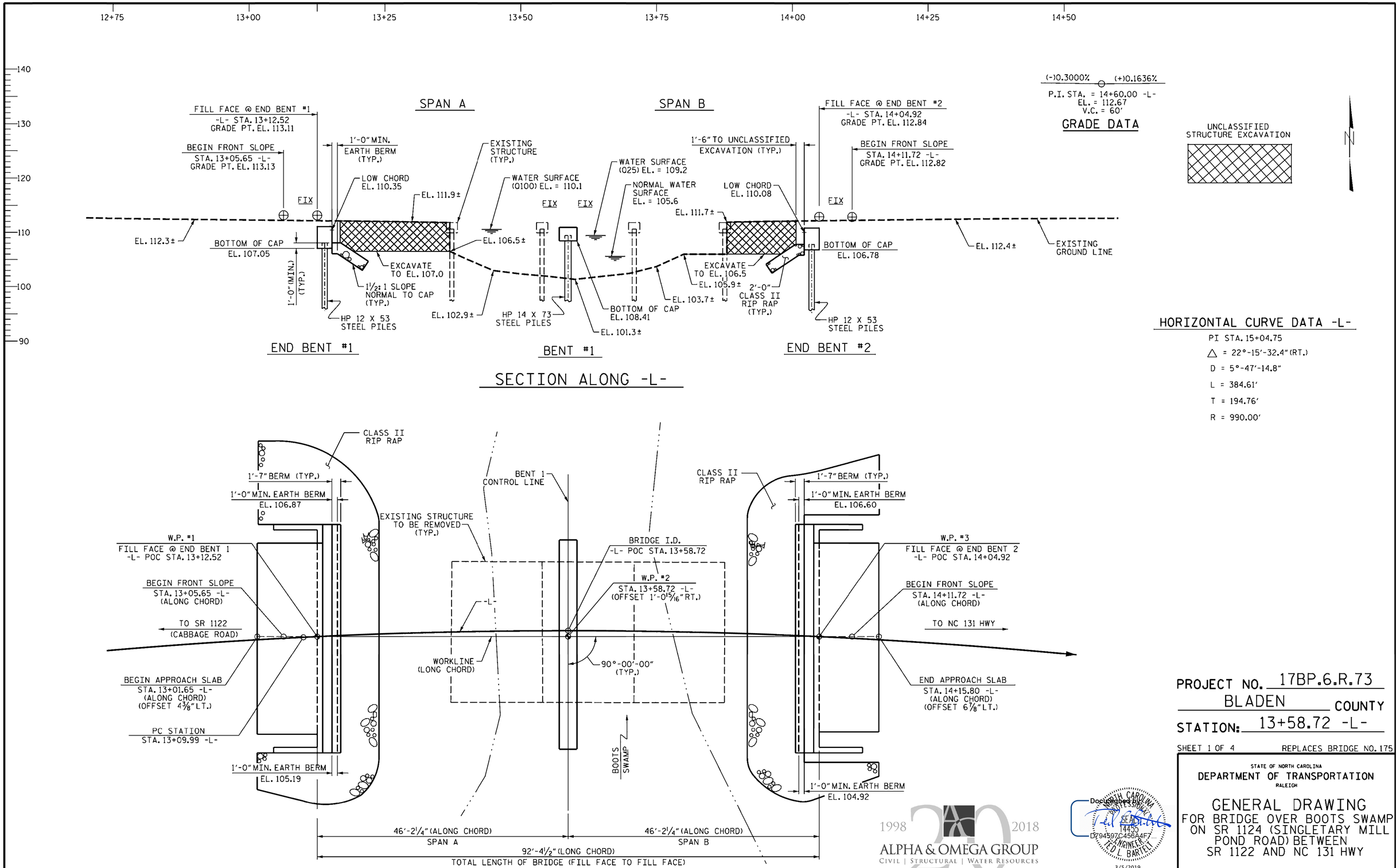

PROJECT NO. 17BP.6.R.73

BLADEN COUNTY

STATION: 13+58.72 -L-

SHEET 1 OF 4 REPLACES BRIDGE NO. 175

STATE OF NORTH CAROLINA
DEPARTMENT OF TRANSPORTATION
RALEIGH

GENERAL DRAWING

FOR BRIDGE OVER BOOTS SWAMP ON SR 1124 (SINGLETARY MILL POND ROAD) BETWEEN SR 1122 AND NC 131 HWY

DRAWN BY : S.G.S	DATE : 12/14/17	
CHECKED BY : S.K.C.	DATE : 02/01/18	
DESIGN ENGINEER OF RECORD: T.L.B.	DATE : 02/01/18	

$$$$$$SYSTIME$$$$$
$$$$$$$$$$$$$$$$$$$$$$$$DGN$$$$$$$$$$$$$$$$$$$$$$$$
$$$$USERNAME$$$$

1998 2018
ALPHA & OMEGA GROUP
CIVIL | STRUCTURAL | WATER RESOURCES

4601 Lake Boone Trail Suite 3C Raleigh, NC 27607
Phone 919 981 0310 Fax 919 981 0451
www.aogroup.com Firm License No. C-1684
A&O PROJECT NO. 2017.025

NORTH CAROLINA PROFESSIONAL SEAL 14455 ENGINEER TODD L. BARTELT
Docusigned by: D794597C456A4F7...
3/5/2019

REFERENCE NO. 1-1
DOCUMENT NOT CONSIDERED FINAL UNLESS ALL SIGNATURES COMPLETED

REVISIONS								
NO.	BY:	DATE:	NO.	BY:	DATE:	SHEET NO.	TOTAL SHEETS
1			3			S1-1	17
2			4				

DocuSign Envelope ID: 3D876990-CC3A-4700-9A79-5976E5602A95

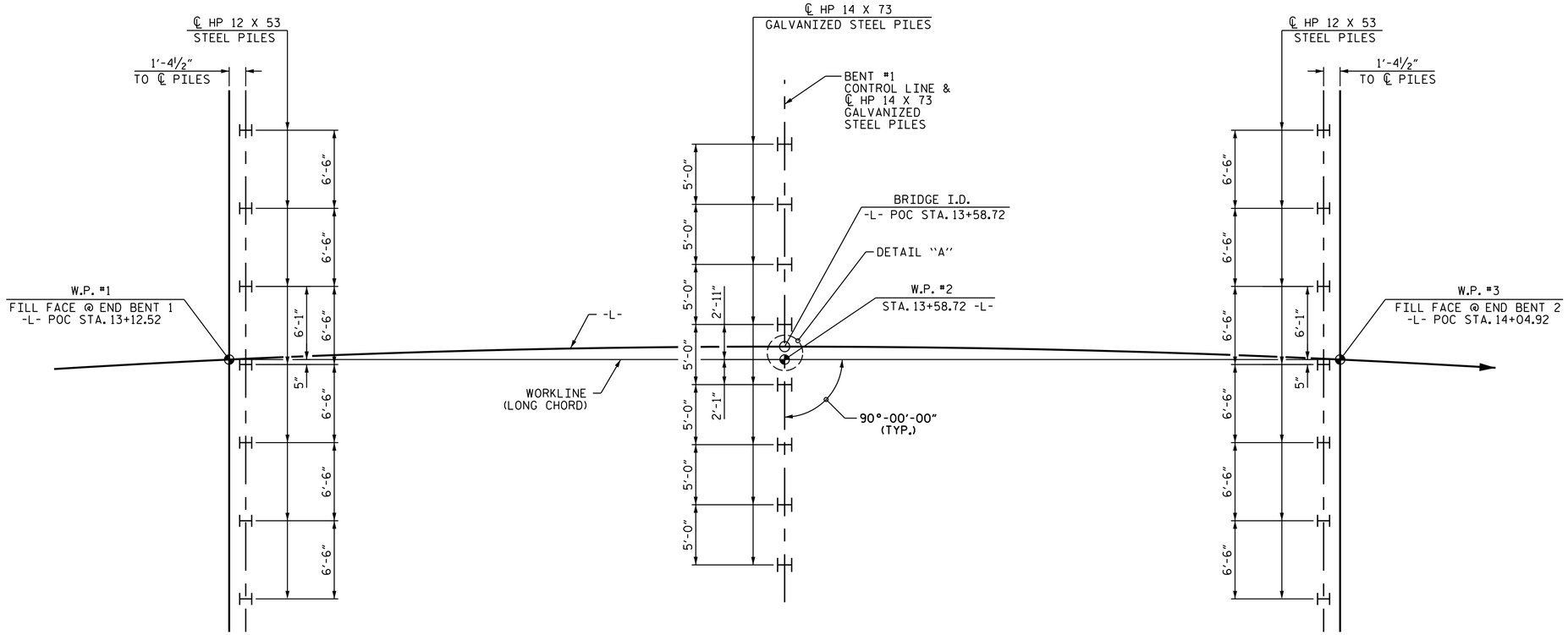

END BENT #1

BENT #1

END BENT #2

FOUNDATION LAYOUT

DIMENSIONS LOCATING PILES ARE SHOWN TO PILE CENTERLINE.

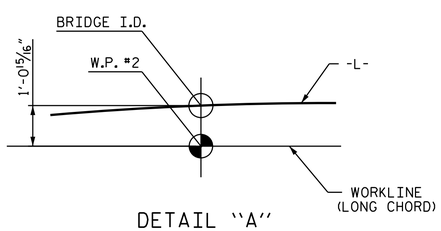

DETAIL "A"

NOTES

FOR PILES, SEE SECTION 450 OF THE STANDARD SPECIFICATIONS.

PILES AT END BENT 1 AND END BENT 2 ARE DESIGNED FOR A FACTORED RESISTANCE OF 65 TONS PER PILE.

DRIVE PILES AT END BENT 1 AND END BENT 2 TO A REQUIRED DRIVING RESISTANCE OF 110 TONS PER PILE.

PILES AT BENT 1 ARE DESIGNED FOR FACTORED RESISTANCE OF 100 TONS PER PILE.

DRIVE PILES AT BENT 1 TO A REQUIRED DRIVING RESISTANCE OF 190 TONS PER PILE. THIS REQUIRED DRIVING RESISTANCE INCLUDES ADDITIONAL RESISTANCE FOR SCOUR.

INSTALL PILES AT BENT 1 TO A TIP ELEVATION NO HIGHER THAN 70 FEET.

THE SCOUR CRITICAL ELEVATIONS FOR BENT 1 IS ELEVATION 86.5 FEET. SCOUR CRITICAL ELEVATIONS ARE USED TO MONITOR POSSIBLE SCOUR PROBLEMS DURING THE LIFE OF THE STRUCTURE.

TESTING PILES WITH THE PDA DURING DRIVING, RESTRIKING OR REDRIVING MAY BE REQUIRED. THE ENGINEER WILL DETERMINE THE NEED FOR PDA TESTING. FOR PDA TESTING, SEE SECTION 450 OF THE STANDARD SPECIFICATIONS.

PROJECT NO. 17.BP.6.R.73
BLADEN COUNTY
STATION: 13+58.72 -L-

SHEET 2 OF 4

STATE OF NORTH CAROLINA
DEPARTMENT OF TRANSPORTATION
RALEIGH

GENERAL DRAWING
FOR BRIDGE OVER BOOTS SWAMP
ON SR 1124 (SINGLETARY MILL POND ROAD) BETWEEN
SR 1122 AND NC 131 HWY

1998 2018
ALPHA & OMEGA GROUP
CIVIL | STRUCTURAL | WATER RESOURCES
4601 Lake Boone Trail Suite 3C Raleigh, NC 27607
Phone 919 981 0310 Fax 919 981 0451
www.aogroup.com Firm License No. C-1684
A&O PROJECT NO. 2017.025

NORTH CAROLINA PROFESSIONAL SEAL 14430 ENGINEER TED L. BARTELL
DocuSigned by:
D794507C456A4F7...
1/24/2019

REFERENCE NO. 1-2

DOCUMENT NOT CONSIDERED FINAL UNLESS ALL SIGNATURES COMPLETED

REVISIONS								SHEET NO.
NO.	BY:	DATE:	NO.	BY:	DATE:			S1-2
1			3					TOTAL SHEETS
2			4					17

DRAWN BY :	S.G.S.	DATE :	01/18/18
CHECKED BY :	S.K.C	DATE :	02/07/18
DESIGN ENGINEER OF RECORD:	T.L.B.	DATE :	9/4/2018

$$$$$$SYSTIME$$$$$
$$$$$$$$$$$$$$$$$$$$$$DGN$$$$$$$$$$$$$$$$$$$$$$$$
$$$$USERNAME$$$$

DocuSign Envelope ID: 3D876990-CC3A-4700-9A79-5976E5602A95

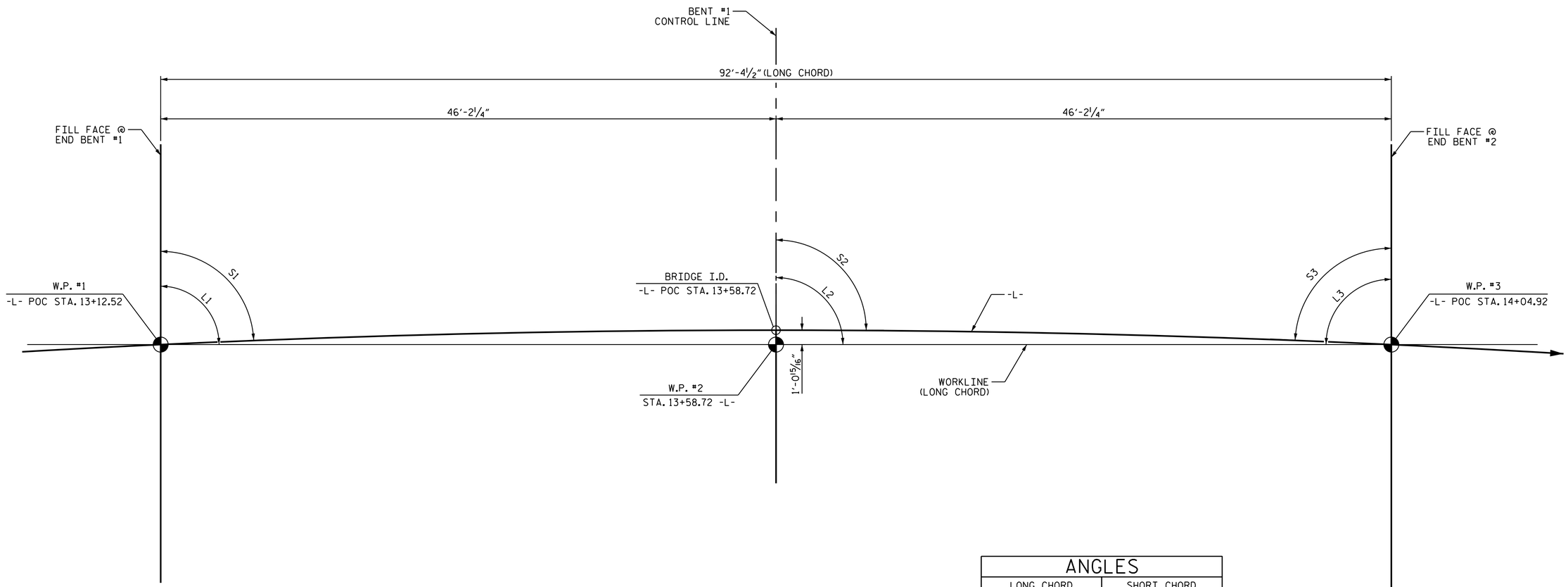

ANGLES			
LONG CHORD		SHORT CHORD	
L1	90°-00'-00"	S1	87°-19'-33"
L2	90°-00'-00"	S2	90°-00'-00"
L3	90°-00'-00"	S3	87°-19'-33"

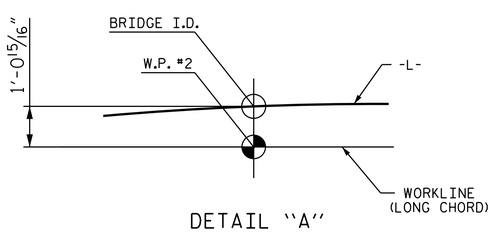

DETAIL "A"

LONG CHORD LAYOUT

PROJECT NO. 17BP.6.R.73
BLADEN COUNTY
STATION: 13+58.72 -L-

SHEET 3 OF 4

STATE OF NORTH CAROLINA
DEPARTMENT OF TRANSPORTATION
RALEIGH

GENERAL DRAWING
FOR BRIDGE OVER BOOTS SWAMP
ON SR 1124 (SINGLETARY MILL
POND ROAD) BETWEEN
SR 1122 AND NC 131 HWY

1998 2018
ALPHA & OMEGA GROUP
CIVIL | STRUCTURAL | WATER RESOURCES

4601 Lake Boone Trail Suite 3C Raleigh, NC 27607
Phone 919 981 0310 Fax 919 981 0451
www.aogroup.com Firm License No. C-1684
A&O PROJECT NO. 2017.025

NORTH CAROLINA PROFESSIONAL SEAL 14433 ENGINEER TED L. BARTELT
DocuSigned by: D79497C456A4F7...
1/24/2019

REFERENCE NO. 1-3
DOCUMENT NOT CONSIDERED FINAL UNLESS ALL SIGNATURES COMPLETED

REVISIONS								SHEET NO.
NO.	BY:	DATE:	NO.	BY:	DATE:			S1-3
1			3					TOTAL SHEETS
2			4					17

DRAWN BY : S. G. S. DATE : 11/28/17
CHECKED BY : S. K. C. DATE : 02/07/18
DESIGN ENGINEER OF RECORD: T. L. B. DATE : 9/4/2018

$$$$$$$SYSTIME$$$$$
$$$$$$$$$$$$$$$$$$$$$$$$DGN$$$$$$$$$$$$$$$$$$$$$$$$
$$$$USERNAME$$$$

DocuSign Envelope ID: EE5BE353-B970-46AC-9FCA-6F85CE9973B5

BM : "BENCHTIE NAIL SET IN 30" TWIN ELM TREE", 147.66', RT OF STA. 13+02.87 -L-, EL 112.08'

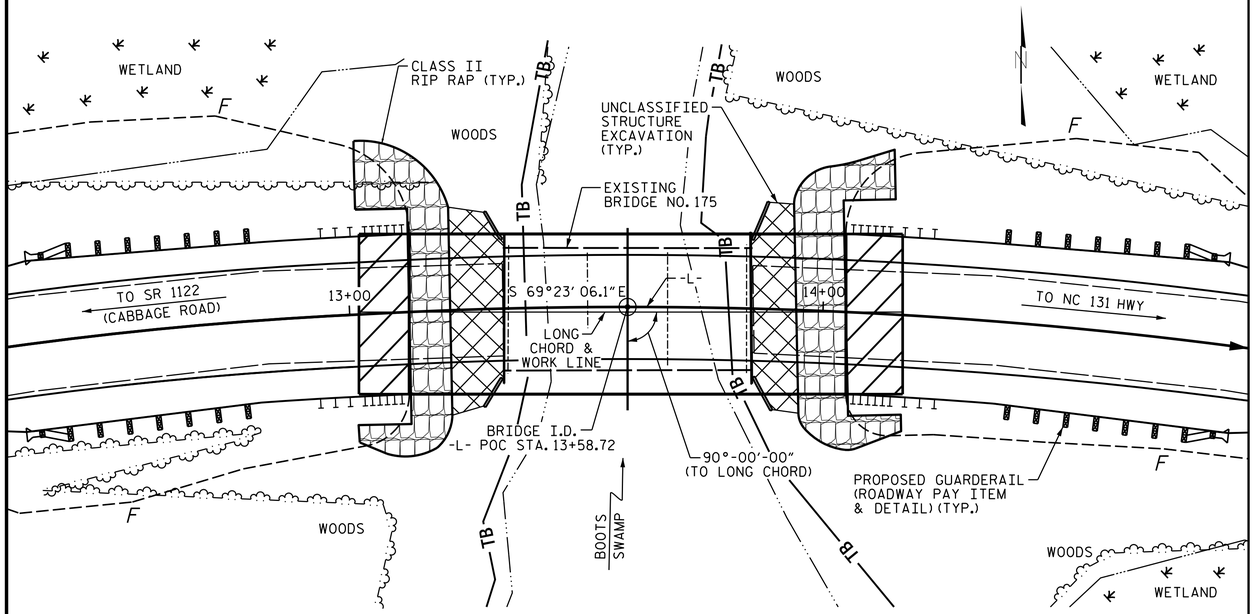

FOR UTILITY INFORMATION, SEE UTILITY PLANS AND SPECIAL PROVISIONS.

LOCATION SKETCH

NOTES:

ASSUMED LIVE LOAD = HL-93 OR ALTERNATE LOADING.

THIS BRIDGE HAS BEEN DESIGNED IN ACCORDANCE WITH THE AASHTO LRFD BRIDGE DESIGN SPECIFICATIONS.

FOR EROSION CONTROL MEASURES, SEE EROSION CONTROL PLANS.

ASPHALT WEARING SURFACE IS INCLUDED IN ROADWAY QUANTITY ON ROADWAY PLANS.

FOR OTHER DESIGN DATA AND GENERAL NOTES, SEE SHEET SN.

THIS STRUCTURE HAS BEEN DESIGNED IN ACCORDANCE WITH "HEC 18 - EVALUATING SCOUR AT BRIDGES."

THE EXISTING STRUCTURE CONSISTING OF 3 SPANS, 1 @ 17'-8", 1 @ 16'-10" AND 1 @ 18'-0" WITH A CLEAR ROADWAY WIDTH OF 24'-0". A REINFORCED CONCRETE FLOOR ON TIMBER JOISTS. THE EXISTING BRIDGE IS PRESENTLY POSTED FOR LOAD LIMIT. SHOULD THE STRUCTURAL INTEGRITY OF THE BRIDGE DETERIORATE DURING CONSTRUCTION OF THE PROPOSED BRIDGE. A LOAD LIMIT MAY BE POSTED AND MAY BED REDUCED AS FOUND NECESSARY DURING THE LIFE OF THE PROJECT.

REMOVAL OF THE EXISTING BRIDGE SHALL BE PERFORMED SO AS NOT TO ALLOW DEBRIS TO FALL INTO THE WATER. THE CONTRACTOR SHALL REMOVE THE BRIDGE AND SUBMIT PLANS FOR DEMOLITION IN ACCORDANCE WITH ARTICLE 402-2 OF THE STANDARD SPECIFICATIONS.

THE SUBSTRUCTURE OF THE EXISTING BRIDGE INDICATED ON THE PLANS IS FROM THE BEST INFORMATION AVAILABLE SINE THIS INFORMATION IS SHOWN FOR THE CONVENIENCE OF THE CONTRACTOR, THE CONTRACTOR SHALL HAVE NO CLAIM WHATSOEVER AGAINST THE DEPARTMENT OF TRANSPORTATION FOR ANY DELAYS OR ADDITIONAL COST INCURRED BASED ON DIFFERENCES BETWEEN THE EXISTING BRIDGE SUBSTRUCTURE SHOWN ON THE PLANS AND THE ACTUAL CONDITIONS AT THE PROJECT SITE.

THIS BRIDGE SHALL BE CONSTRUCTED USING TOP-DOWN CONSTRUCTION METHODS. THE USE OF A TEMPORARY CAUSEWAY OR WORK BRIDGE IS NOT PERMITTED.

FOR ASBESTOS ASSESSMENT FOR BRIDGE DEMOLITION & RENOVATION ACTIVITIES, SEE SPECIAL PROVISIONS.

AT THE CONTRACTOR'S OPTION, PRESTRESSED CONCRETE END BENT AND BENT CAPS MAY BE SUBSTITUTED IN PLACE OF THE CAST IN PLACE CAPS. THE CONTRACTOR SHALL COORDINATE WITH THE RESIDENT ENGINEER TO RECEIVE REVISED PLANS AND DETAILS FROM THE STRUCTURES MANAGEMENT UNIT. THE REDESIGN AND ANY ADDITIONAL MATERIALS NEEDED WILL BE AT NO ADDITIONAL COST TO THE CONTRACTOR.

THE CONTRACTOR SHALL PROVIDE INDEPENDENT ASSURANCE SAMPLES OF REINFORCING STEEL AS FOLLOWS: FOR PROJECTS REQUIRING UP TO 400 TONS OF REINFORCING STEEL, ONE 30 INCH SAMPLE OF EACH SIZE BAR USED, AND FOR PROJECTS REQUIRING OVER 400 TONS OF REINFORCING STEEL, TWO 30 INCH SAMPLES OF EACH SIZE BAR USED. THE BARS FROM WHICH THE SAMPLES ARE TAKEN MUST THEN BE SPLICED WITH REPLACEMENT BARS OF THE SIZE AND LENGTH OF THE SAMPLE PLUS A MINIMUM LAP SPLICE OF THIRTY BAR DIAMETERS. PAYMENT FOR THE SAMPLES OF REINFORCING STEEL SHALL CONSIDERED INCIDENTAL TO VARIOUS PAY ITEMS.

THIS BRIDGE IS LOCATED IN SEISMIC ZONE 2.

FOR FALSEWORK AND FORMWORK, SEE SPECIAL PROVISIONS.

FOR SUBMITTAL OF WORKING DRAWINGS, SEE SPECIAL PROVISIONS.

FOR GROUT FOR STRUCTURES, SEE SPECIAL PROVISIONS.

FOR CRANE SAFETY, SEE SPECIAL PROVISIONS.

FOR INTERIOR BENT 1 ONLY PARTIAL GALVANIZING OF THE PILES IS REQUIRED. SEE INTERIOR BENT SHEETS FOR REQUIRED GALVANIZING LENGTHS. PAYMENT FOR PARTIALLY GALVANIZED PILES WILL BE MADE UNDER THE CONTRACT UNIT PRICE FOR GALVANIZED STEEL PILES.

THE MATERIAL SHOWN IN THE CROSS-HATCHED AREA SHALL BE EXCAVATED FOR A DISTANCE OF 22 FT LEFT SIDE AND 22 FT RIGHT SIDE OF CENTERLINE ROADWAY AS DIRECTED BY THE ENGINEER. THIS WORK WILL BE PAID FOR AT THE CONTRACT LUMP SUM PRICE FOR UNCLASSIFIED STRUCTURE EXCAVATION. SEE SECTION 412 OF THE STANDARD SPECIFICATIONS.

HYDRAULIC DATA

DESIGN DISCHARGE	= 900 C.F.S.
FREQUENCY OF DESIGN FLOOD	= 25 YR.
DESIGN HIGH WATER ELEVATION	= 109.2
DRAINAGE AREA	= 8.18 SQ. MI.
BASE DISCHARGE (Q100)	= 1300 C.F.S.
BASE HIGH WATER ELEVATION	= 110.1

OVERTOPPING FLOOD DATA

OVERTOPPING DISCHARGE	= 3800 C.F.S.
FREQUENCY OF OVERTOPPING FLOOD	= 500+ YR.
OVERTOPPING FLOOD ELEVATION	= 113.4

TOTAL BILL OF MATERIAL

	REMOVAL OF EXISTING STRUCTURE	ASBESTOS ASSESSMENT	PDA TESTING	UNCLASSIFIED STRUCTURE EXCAVATION	CLASS A CONCRETE	BRIDGE APPROACH SLABS	REINFORCING STEEL	HP 12 X 53 PILES EQUIPMENT SETUP	HP 14 X 73 PILE EQUIPMENT SETUP	HP 12 X 53 STEEL PILES		HP 14 X 73 GALVANIZED STEEL PILES		PILES REDRIVES	VERTICAL CONCRETE BARRIER RAIL	RIP RAP CLASS II (2'-0" THICK)	GEOTEXTILE FOR DRAINAGE	ELASTOMERIC BEARINGS	3'-0" x 1'-9" PRESTRESSED CONCRETE CORED SLABS	
	LUMP SUM	LUMP SUM	EACH	LUMP SUM	CU. YDS.	LUMP SUM	LBS.	EACH	EACH	NO.	LIN. FT.	NO.	LIN. FT.	EACH	LIN. FT.	TONS	SQ. YDS.	LUMP SUM	NO.	LIN. FT.
SUPERSTRUCTURE						LUMP SUM									180.5			LUMP SUM	24	1080.00
END BENT NO. 1				LUMP SUM	22.8		2806	7		7	350			3		214	237			
BENT NO. 1					11.6		2312		8			8	640	4						
END BENT NO. 2				LUMP SUM	22.8		2806	7		7	385			3		222	247			
TOTAL	LUMP SUM	LUMP SUM	1	LUMP SUM	57.2	LUMP SUM	7924	14	8	14	735	8	640	10	180.5	436	484	LUMP SUM	24	1080.00

PROJECT NO. 17BP.6.R.73

BLADEN COUNTY

STATION: 13+58.72 -L-

SHEET 4 OF 4

STATE OF NORTH CAROLINA
DEPARTMENT OF TRANSPORTATION
RALEIGH

GENERAL DRAWING
FOR BRIDGE OVER BOOTS SWAMP
ON SR 1124 (SINGLETARY MILL POND ROAD) BETWEEN
SR 1122 AND NC 131 HWY

ALPHA & OMEGA GROUP
1998 2018
CIVIL | STRUCTURAL | WATER RESOURCES
4601 Lake Boone Trail Suite 3C Raleigh, NC 27607
Phone 919 981 0310 Fax 919 981 0451
www.aogroup.com Firm License No. C-1684
A&O PROJECT NO. 2017.025

NORTH CAROLINA PROFESSIONAL SEAL 14455 ENGINEER TED L. BARTLETT
DocuSigned by: D794307C456A4FF...
3/1/2019

REFERENCE NO. 1-4
DOCUMENT NOT CONSIDERED FINAL UNLESS ALL SIGNATURES COMPLETED

REVISIONS									SHEET NO.
NO.	BY:	DATE:	NO.	BY:	DATE:				S1-4
1			3						TOTAL SHEETS
2			4						17

DRAWN BY : S. G. S. DATE : 01/25/18
CHECKED BY : S. K. C. DATE : 02/07/18
DESIGN ENGINEER OF RECORD: T. L. B. DATE : 9/4/2018

$$$$$$SYSTIME$$$$$
$$$$$$$$$$$$$$$$$$$$$$$$DGN$$$$$$$$$$$$$$$$$$$$$$$$
$$$$USERNAME$$$$

DocuSign Envelope ID: 3D876990-CC3A-4700-9A79-5976E5602A95

LOAD AND RESISTANCE FACTOR RATING (LRFD) SUMMARY FOR PRESTRESSED CONCRETE GIRDERS

LEVEL		VEHICLE	WEIGHT (W) (TONS)	CONTROLLING LOAD RATING	MINIMUM RATING FACTORS (RF)	TONS = W X RF	STRENGTH I LIMIT STATE											SERVICE III LIMIT STATE						COMMENT NUMBER
								MOMENT					SHEAR						MOMENT					
							LIVELOAD FACTORS	DISTRIBUTION FACTORS (DF)	RATING FACTOR	SPAN	GIRDER LOCATION	DISTANCE FROM LEFT END OF SPAN (ft)	DISTRIBUTION FACTORS (DF)	RATING FACTOR	SPAN	GIRDER LOCATION	DISTANCE FROM LEFT END OF SPAN (ft)	LIVELOAD FACTORS	DISTRIBUTION FACTORS (DF)	RATING FACTOR	SPAN	GIRDER LOCATION	DISTANCE FROM LEFT END OF SPAN (ft)	
DESIGN LOAD RATING		HL-93(Inv)	N/A	**1**	1.088	--	1.75	0.277	1.34	45'	EL	22	0.539	1.23	45'	EL	2.2	0.80	0.277	**1.09**	45'	EL	**22**	
		HL-93(Opr)	N/A	--	1.590	--	1.35	0.277	1.74	45'	EL	22	0.539	1.59	45'	EL	2.2	N/A	--	--	--	--	--	
		HS-20(Inv)	36.000	**2**	1.336	48.104	1.75	0.277	1.65	45'	EL	22	0.539	1.45	45'	EL	2.2	0.80	0.277	**1.34**	45'	EL	**22**	
		HS-20(Opr)	36.000	--	1.882	67.763	1.35	0.277	2.14	45'	EL	22	0.539	1.88	45'	EL	2.2	N/A	--	--	--	--	--	
LEGAL LOAD RATING	SV	SNSH	13.500	--	2.611	35.252	1.4	0.277	4.02	45'	EL	22	0.539	4.01	45'	EL	2.2	0.80	0.277	2.61	45'	EL	22	
		SNGARBS2	20.000	--	2.108	42.166	1.4	0.277	3.25	45'	EL	22	0.539	2.94	45'	EL	2.2	0.80	0.277	2.11	45'	EL	22	
		SNAGRIS2	22.000	--	2.067	45.466	1.4	0.277	3.15	45'	EL	17.6	0.539	2.77	45'	EL	2.2	0.80	0.277	2.07	45'	EL	22	
		SNCOTTS3	27.250	--	1.304	35.527	1.4	0.277	2.01	45'	EL	22	0.539	2.01	45'	EL	2.2	0.80	0.277	1.30	45'	EL	22	
		SNAGGRS4	34.925	--	1.150	40.181	1.4	0.277	1.77	45'	EL	22	0.539	1.74	45'	EL	2.2	0.80	0.277	1.15	45'	EL	22	
		SNS5A	35.550	--	1.121	39.841	1.4	0.277	1.73	45'	EL	22	0.539	1.79	45'	EL	2.2	0.80	0.277	1.12	45'	EL	22	
		SNS6A	39.950	--	1.056	42.175	1.4	0.277	1.63	45'	EL	22	0.539	1.67	45'	EL	2.2	0.80	0.277	1.06	45'	EL	22	
		SNS7B	42.000	**3**	1.006	42.268	1.4	0.277	1.55	45'	EL	22	0.539	1.68	45'	EL	2.2	0.80	0.277	**1.01**	45'	EL	**22**	
	TTST	TNAGRIT3	33.000	--	1.296	42.759	1.4	0.277	2	45'	EL	22	0.539	1.96	45'	EL	2.2	0.80	0.277	1.30	45'	EL	22	
		TNT4A	33.075	--	1.309	43.305	1.4	0.277	2.02	45'	EL	22	0.539	1.88	45'	EL	2.2	0.80	0.277	1.31	45'	EL	22	
		TNT6A	41.600	--	1.099	45.712	1.4	0.277	1.69	45'	EL	22	0.539	1.83	45'	EL	2.2	0.80	0.277	1.10	45'	EL	22	
		TNT7A	42.000	--	1.120	47.043	1.4	0.277	1.73	45'	EL	22	0.539	1.69	45'	EL	2.2	0.80	0.277	1.12	45'	EL	22	
		TNT7B	42.000	--	1.166	48.975	1.4	0.277	1.8	45'	EL	22	0.539	1.61	45'	EL	2.2	0.80	0.277	1.17	45'	EL	22	
		TNAGRIT4	43.000	--	1.111	47.757	1.4	0.277	1.71	45'	EL	22	0.539	1.55	45'	EL	2.2	0.80	0.277	1.11	45'	EL	22	
		TNAGT5A	45.000	--	1.033	46.505	1.4	0.277	1.59	45'	EL	22	0.539	1.59	45'	EL	2.2	0.80	0.277	1.03	45'	EL	22	
		TNAGT5B	45.000	--	1.009	45.408	1.4	0.277	1.56	45'	EL	22	0.539	1.47	45'	EL	2.2	0.80	0.277	1.01	45'	EL	22	

LOAD FACTORS:

DESIGN LOAD RATING FACTORS	LIMIT STATE	γ_{DC}	γ_{DW}
	STRENGTH I	1.25	1.50
	SERVICE III	1.00	1.00

NOTES:

MINIMUM RATING FACTORS ARE BASED ON THE STRENGTH I AND SERVICE III LIMIT STATES.

ALLOWABLE STRESSES FOR SERVICE III LIMIT STATE ARE AS REQUIRED FOR DESIGN.

COMMENTS:

1.
2.
3.
4.

(#) CONTROLLING LOAD RATING

(1) DESIGN LOAD RATING (HL-93)
(2) DESIGN LOAD RATING (HS-20)
(3) LEGAL LOAD RATING **
** SEE CHART FOR VEHICLE TYPE

GIRDER LOCATION

I - INTERIOR GIRDER
EL - EXTERIOR LEFT GIRDER
ER - EXTERIOR RIGHT GIRDER

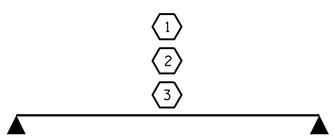

LRFR SUMMARY

FOR SPAN 'A' AND 'B'

PROJECT NO. 17BP.6.R.73
BLADEN COUNTY
STATION: 13+58.72 -L-

1998 2018
ALPHA & OMEGA GROUP
CIVIL | STRUCTURAL | WATER RESOURCES
4601 Lake Boone Trail Suite 3C Raleigh, NC 27607
Phone 919 981 0310 Fax 919 981 0451
www.aogroup.com Firm License No. C-1684
A&O PROJECT NO. 2017.025

NORTH CAROLINA PROFESSIONAL SEAL 14455 ENGINEER TED L. BARTELT
DocuSigned by: D794597C45604P7...
1/24/2019

REFERENCE NO. 1-5
DOCUMENT NOT CONSIDERED FINAL UNLESS ALL SIGNATURES COMPLETED

STATE OF NORTH CAROLINA
DEPARTMENT OF TRANSPORTATION
RALEIGH

STANDARD
LRFR SUMMARY FOR 45' CORED SLAB UNIT 90° SKEW
(NON-INTERSTATE TRAFFIC)

REVISIONS						SHEET NO.
NO.	BY:	DATE:	NO.	BY:	DATE:	S1-5
1			3			TOTAL SHEETS
2			4			17

DRAWN BY : S.G.S. DATE : 01/25/18
CHECKED BY : S.K.C. DATE : 02/07/18
DESIGN ENGINEER OF RECORD: T.L.B. DATE : 9/4/2018

$$$$$$SYSTIME$$$$$
$$$$$$$$$$$$$$$$$$$$$$$$DGN$$$$$$$$$$$$$$$$$$$$$$$$
$$$$USERNAME$$$$

STD. NO. 21LRFR1_90S_45L

DocuSign Envelope ID: 3D876990-CC3A-4700-9A79-5976E5602A95

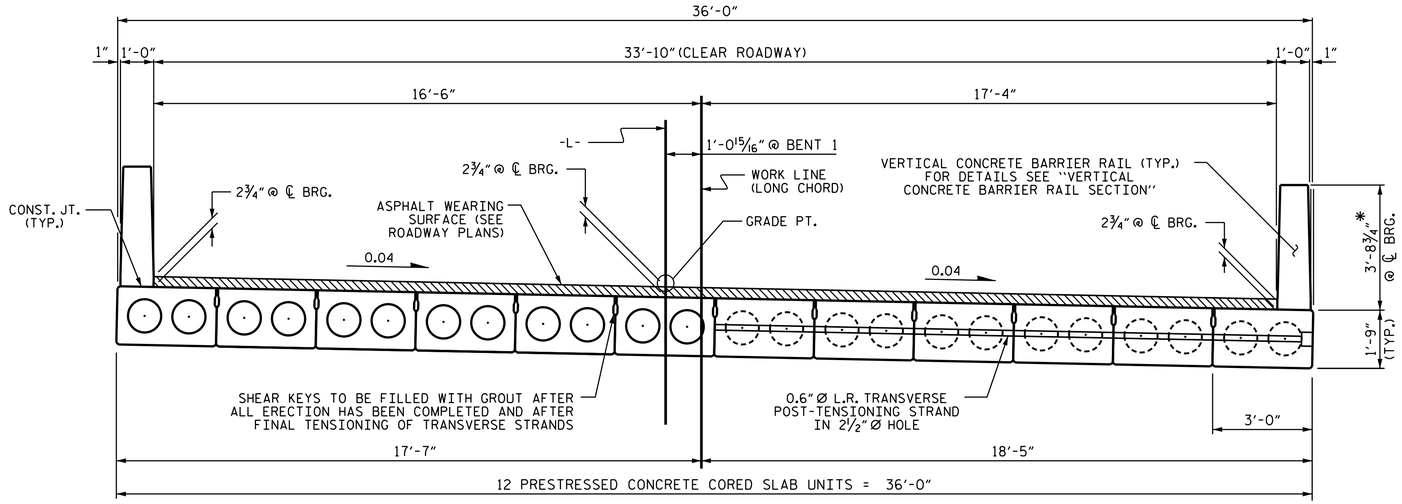

TYPICAL SECTION

* - THE MAXIMUM BARRIER RAIL HEIGHT AND ASPHALT THICKNESS IS SHOWN. THE HEIGHT OF THE BARRIER RAIL AND ASPHALT THICKNESS VARIES WHILE THE TOP OF THE BARRIER RAIL FOLLOWS THE PROFILE OF THE GUTTERLINE. FOR RAIL HEIGHT DETAILS AND ASPHALT THICKNESS SEE THE "VERTICAL CONCRETE BARRIER RAIL SECTION" DETAIL.

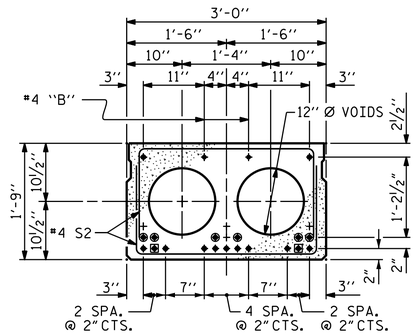

INTERIOR SLAB SECTION (45' UNIT)

(13 STRANDS REQUIRED)

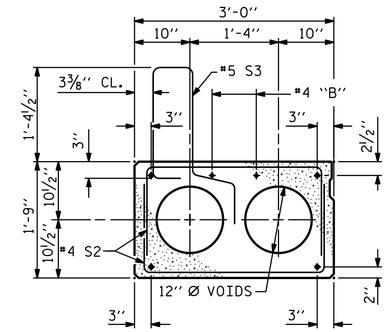

EXT. SLAB SECTION

(FOR PRESTRESSED STRAND LAYOUT, SEE INTERIOR SLAB SECTION.)

0.6" Ø LOW RELAXATION STRAND LAYOUT

◉ BOND SHALL BE BROKEN ON THESE STRANDS FOR A DISTANCE OF 2'-0" FROM END OF CORED SLAB UNIT. SEE STANDARD SPECIFICATIONS, ARTICLE 1078-7.

◉ OPTIONAL FULL LENGTH DEBONDED STRANDS. THESE STRANDS ARE NOT REQUIRED. IF THE FABRICATOR CHOOSES TO INCLUDE THESE STRANDS IN THE CORED SLAB UNIT, THE STRANDS SHALL BE DEBONDED FOR THE FULL LENGTH OF THE UNIT AT NO ADDITIONAL COST. SEE STANDARD SPECIFICATIONS, ARTICLE 1078-7.

DEBONDING LEGEND

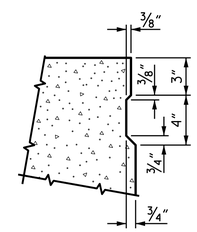

SHEAR KEY DETAIL

NOTE: OMIT SHEAR KEY ON OUTSIDE FACE OF EXTERIOR CORED SLABS.

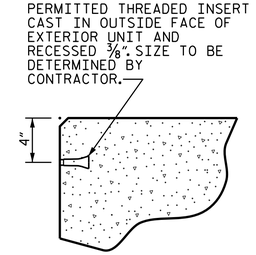

THREADED INSERT DETAIL

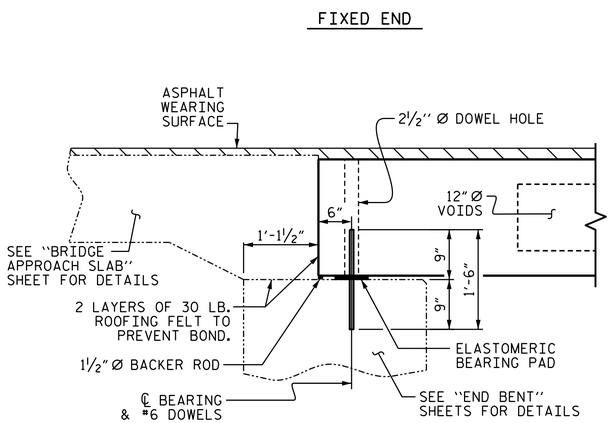

SECTION AT END BENT

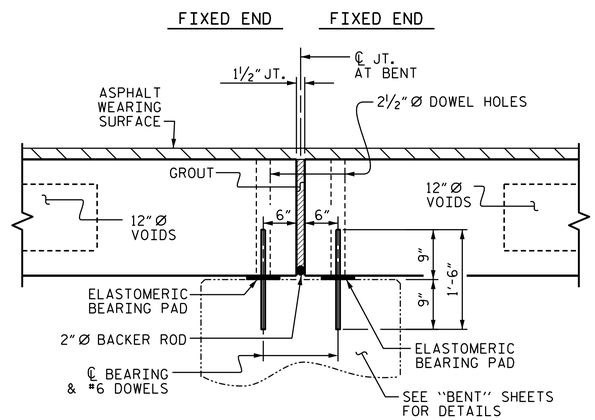

SECTION AT BENT

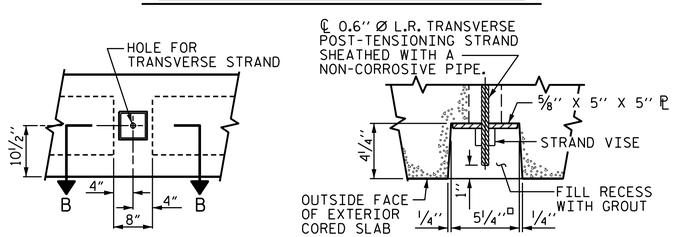

ELEVATION VIEW

SECTION B-B

GROUTED RECESS AT END OF POST-TENSIONED STRAND OF CORED SLABS

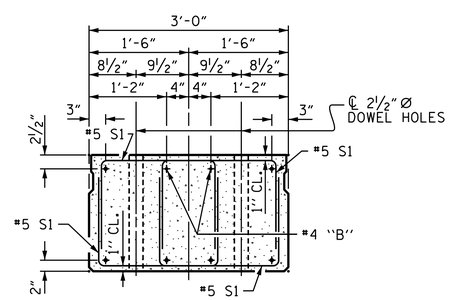

END ELEVATION

SHOWING PLACEMENT OF DOUBLE STIRRUPS AND LOCATION OF DOWEL HOLES. (STRAND LAYOUT NOT SHOWN.) INTERIOR SLAB UNIT SHOWN-EXTERIOR SLAB UNIT SIMILAR EXCEPT SHEAR KEY LOCATION.

PROJECT NO. 17BP.6.R.73
BLADEN COUNTY
STATION: 13+58.72 -L-

SHEET 1 OF 3

STATE OF NORTH CAROLINA
DEPARTMENT OF TRANSPORTATION
RALEIGH

STANDARD
3'-0" X 1'-9"
PRESTRESSED CONCRETE CORED SLAB UNIT
90° SKEW

DocuSigned by:
D794597C456A4F7...
1/24/2019

1998 2018
ALPHA & OMEGA GROUP
CIVIL | STRUCTURAL | WATER RESOURCES
4601 Lake Boone Trail Suite 3C Raleigh, NC 27607
Phone 919 981 0310 Fax 919 981 0451
www.aogroup.com Firm License No. C-1684
A&O PROJECT NO. 2017.025

REFERENCE NO. 1-6
DOCUMENT NOT CONSIDERED FINAL UNLESS ALL SIGNATURES COMPLETED

REVISIONS						SHEET NO.
NO.	BY:	DATE:	NO.	BY:	DATE:	S1-6
1			3			TOTAL SHEETS
2			4			17

STD. NO. 21" PCS2_36_90S

DRAWN BY :	S.G.S	DATE :	01/23/18
CHECKED BY :	S.K.C.	DATE :	02/07/18
DESIGN ENGINEER OF RECORD:	T.L.B.	DATE :	??

$$$$$$SYSTIME$$$$$
$$$$$$$$$$$$$$$$$$$$$$$$DGN$$$$$$$$$$$$$$$$$$$$$$$$
$$$$USERNAME$$$$

DocuSign Envelope ID: 3D876990-CC3A-4700-9A79-5976E5602A95

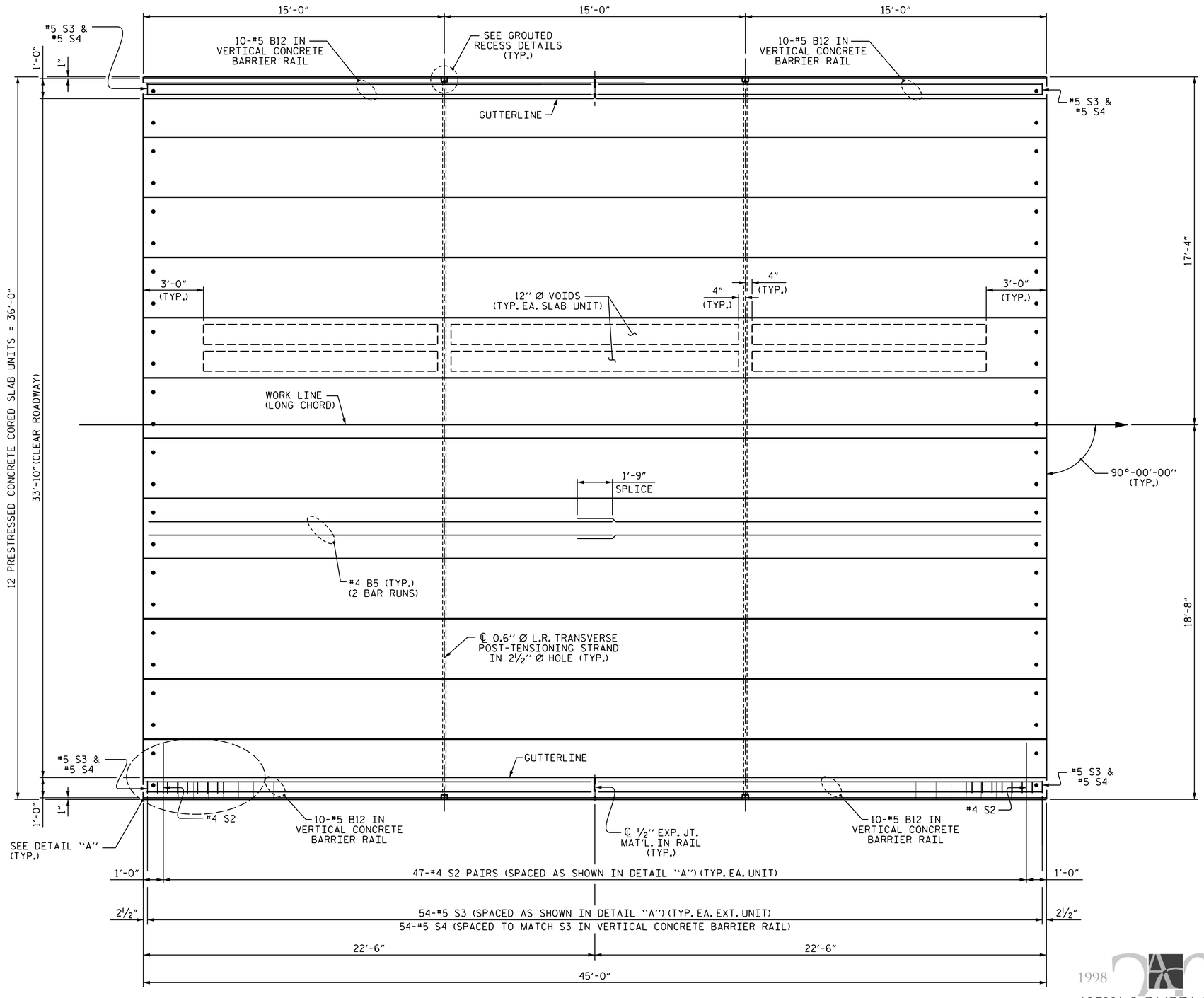

PLAN OF UNIT

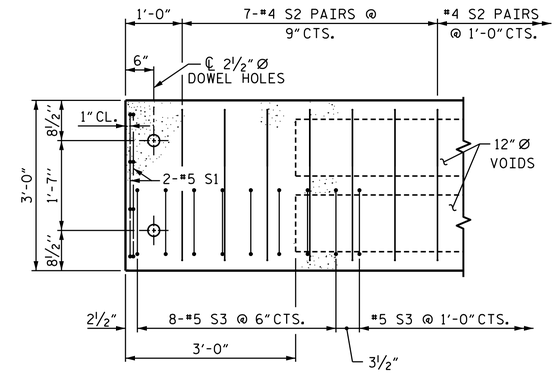

DETAIL "A"

(TYPICAL EACH END OF UNIT)
NOTE: EXTERIOR UNIT SHOWN - INTERIOR UNIT SIMILAR EXCEPT OMIT #5 S3 BARS.

PROJECT NO. 17BP.6.R.73
BLADEN COUNTY
STATION: 13+58.72 -L-

SHEET 2 OF 3

STATE OF NORTH CAROLINA
DEPARTMENT OF TRANSPORTATION
RALEIGH

PLAN OF 45' UNIT
33'-10" CLEAR ROADWAY
90° SKEW

DRAWN BY : S.G.S.	DATE : 01/25/18	
CHECKED BY : S.K.C.	DATE : 02/07/18	
DESIGN ENGINEER OF RECORD: T.L.B.	DATE : 9/4/2018	

1998 20 2018
ALPHA & OMEGA GROUP
CIVIL | STRUCTURAL | WATER RESOURCES
4601 Lake Boone Trail Suite 3C Raleigh, NC 27607
Phone 919 981 0310 Fax 919 981 0451
www.aogroup.com Firm License No. C-1684
A&O PROJECT NO. 2017.025

DocuSigned by:
D794597C456A4F7...
1/24/2019

REFERENCE NO. 1-7

DOCUMENT NOT CONSIDERED FINAL UNLESS ALL SIGNATURES COMPLETED

REVISIONS								
NO.	BY:	DATE:	NO.	BY:	DATE:	SHEET NO.	S1-7
1			3			TOTAL SHEETS	17
2			4				

STD. NO. 21" PCS_36_90S_45L

$$$$$$SYSTIME$$$$$
$$$$$$$$$$$$$$$$$$$$$$$$DGN$$$$$$$$$$$$$$$$$$$$$$$$
$$$$USERNAME$$$$

DocuSign Envelope ID: 3D876990-CC3A-4700-9A79-5976E5602A95

CORED SLABS REQUIRED

	NUMBER	LENGTH	TOTAL LENGTH
45' UNIT			
EXTERIOR C.S.	4	45'-0"	180'-0"
INTERIOR C.S.	20	45'-0"	900'-0"
TOTAL	24	45'-0"	1080'-0"

DEAD LOAD DEFLECTION AND CAMBER

	3'-0" x 1'-9"
45' CORED SLAB UNIT	0.6" Ø L.R. STRAND
CAMBER (SLAB ALONE IN PLACE)	7/8" ↑
DEFLECTION DUE TO SUPERIMPOSED DEAD LOAD**	1/8" ↓
FINAL CAMBER	3/4" ↑

** INCLUDES FUTURE WEARING SURFACE

GUTTERLINE ASPHALT THICKNESS & RAIL HEIGHT

	ASPHALT OVERLAY THICKNESS	RAIL HEIGHT
	@ MID-SPAN	@ MID-SPAN
45' UNITS	2"	3'-8"

GRADE 270 STRANDS

	0.6" Ø L.R.
AREA (SQUARE INCHES)	0.217
ULTIMATE STRENGTH (LBS. PER STRAND)	58,600
APPLIED PRESTRESS (LBS. PER STRAND)	43,950

BILL OF MATERIAL FOR VERTICAL CONCRETE BARRIER RAIL

BAR	BARS PER PAIR OF EXTERIOR UNITS	TOTAL NO.	SIZE	TYPE	LENGTH	WEIGHT
	45' UNIT					
*B12	40	80	#5	STR	22'-1"	1843
* S4	108	216	#5	2	7'-2"	1615
* EPOXY COATED REINFORCING STEEL				LBS.		3458
CLASS AA CONCRETE				CU.YDS.		23.0
TOTAL VERTICAL CONCRETE BARRIER RAIL				LN. FT.		180.5

BILL OF MATERIAL FOR ONE 45' CORED SLAB UNIT

				EXTERIOR UNIT		INTERIOR UNIT	
BAR	NUMBER	SIZE	TYPE	LENGTH	WEIGHT	LENGTH	WEIGHT
B5	4	#4	STR	23'-3"	62	23'-3"	62
S1	8	#5	3	4'-3"	35	4'-3"	35
S2	94	#4	3	5'-4"	335	5'-4"	335
* S3	54	#5	1	5'-7"	314		
REINFORCING STEEL			LBS.		432		432
* EPOXY COATED REINFORCING STEEL			LBS.		314		
5000 P.S.I. CONCRETE			CU. YDS.		6.5		6.5
0.6" Ø L.R. STRANDS			No.		13		13

BAR TYPES

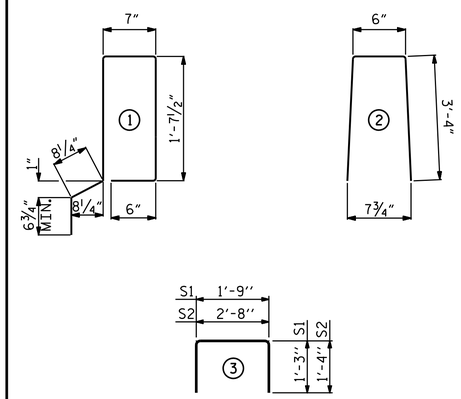

ALL BAR DIMENSIONS ARE OUT TO OUT

CONCRETE RELEASE STRENGTH

UNIT	PSI
45' UNITS	4000

NOTES

ALL PRESTRESSING STRANDS SHALL BE 7-WIRE LOW RELAXATION GRADE 270 STRANDS AND SHALL CONFORM TO AASHTO M203 EXCEPT FOR SAMPLING REQUIREMENTS WHICH SHALL BE IN ACCORDANCE WITH THE STANDARD SPECIFICATIONS.

ALL REINFORCING STEEL CAST WITH THE CORED SLAB SECTIONS SHALL BE GRADE 60 AND SHALL BE INCLUDED IN THE UNIT PRICE BID FOR PRESTRESSED CONCRETE CORED SLABS.

RECESSES FOR TRANSVERSE STRANDS SHALL BE GROUTED AFTER THE TENSIONING OF THE STRANDS.

THE 2 1/2" Ø DOWEL HOLES AT FIXED ENDS OF SLAB SECTIONS SHALL BE FILLED WITH NON-SHRINK GROUT.

THE BACKER RODS SHALL CONFORM TO THE REQUIREMENTS OF TYPE M BOND BREAKER. SEE SECTION 1028 OF THE STANDARD SPECIFICATIONS.

WHEN CORED SLABS ARE CAST, AN INTERNAL HOLD-DOWN SYSTEM SHALL BE EMPLOYED TO PREVENT VOIDS FROM RISING OR MOVING SIDEWAYS. AT LEAST SIX WEEKS PRIOR TO CASTING CORED SLABS, THE CONTRACTOR SHALL SUBMIT TO THE ENGINEER FOR REVIEW AND COMMENT, DETAILED DRAWINGS OF THE PROPOSED HOLD-DOWN SYSTEM. IN ADDITION TO STRUCTURAL DETAILS, LOCATION AND SPACING OF THE HOLD-DOWNS SHALL BE INDICATED.

ALL REINFORCING STEEL IN THE VERTICAL CONCRETE BARRIER RAIL SHALL BE EPOXY COATED.

PRESTRESSING STRANDS SHALL BE CUT FLUSH WITH THE CORED SLAB UNIT ENDS.

APPLY EPOXY PROTECTIVE COATING TO CORED SLAB UNIT ENDS.

GROOVED CONTRACTION JOINTS, 1/2" IN DEPTH, SHALL BE TOOLED IN ALL EXPOSED FACES OF THE VERTICAL CONCRETE BARRIER RAIL AND IN ACCORDANCE WITH ARTICLE 825-10(B) OF THE STANDARD SPECIFICATIONS. A CONTRACTION JOINT SHALL BE LOCATED AT EACH THIRD POINT BETWEEN VERTICAL CONCRETE BARRIER RAIL EXPANSION JOINTS. ONLY ONE CONTRACTION JOINT IS REQUIRED AT MIDPOINT OF VERTICAL CONCRETE BARRIER RAIL SEGMENTS LESS THAN 20 FEET IN LENGTH AND NO CONTRACTION JOINTS ARE REQUIRED FOR THOSE SEGMENTS LESS THAN 10 FEET IN LENGTH.

FLAME CUTTING OF THE TRANSVERSE POST-TENSIONING STRAND IS NOT ALLOWED.

THE TRANSFER OF LOAD FROM THE ANCHORAGES TO THE CORED SLAB UNIT SHALL BE DONE WHEN THE CONCRETE HAS REACHED A COMPRESSIVE STRENGTH OF NOT LESS THAN THE REQUIRED STRENGTH SHOWN IN THE "CONCRETE RELEASE STRENGTH" TABLE.

FOR GROUT FOR STRUCTURES, SEE SPECIAL PROVISIONS.

THE PERMITTED THREADED INSERTS ARE DETAILED AS AN OPTION FOR THE CONTRACTOR TO ATTACH FALSEWORK AND FORMWORK DURING CONSTRUCTION.

THE PERMITTED THREADED INSERTS IN THE EXTERIOR UNITS SHALL BE SIZED BY THE CONTRACTOR, SPACED AT 4'-0" CENTERS AND GALVANIZED IN ACCORDANCE WITH SECTION 1076 OF THE STANDARD SPECIFICATIONS. STAINLESS STEEL THREADED INSERTS MAY BE USED AS AN ALTERNATE.

THE PERMITTED THREADED INSERTS SHALL BE GROUTED BY THE CONTRACTOR IMMEDIATELY FOLLOWING REMOVAL OF THE FALSEWORK.

THE COST OF THE PERMITTED THREADED INSERTS SHALL BE INCLUDED IN THE PRICE BID FOR THE PRECAST UNITS.

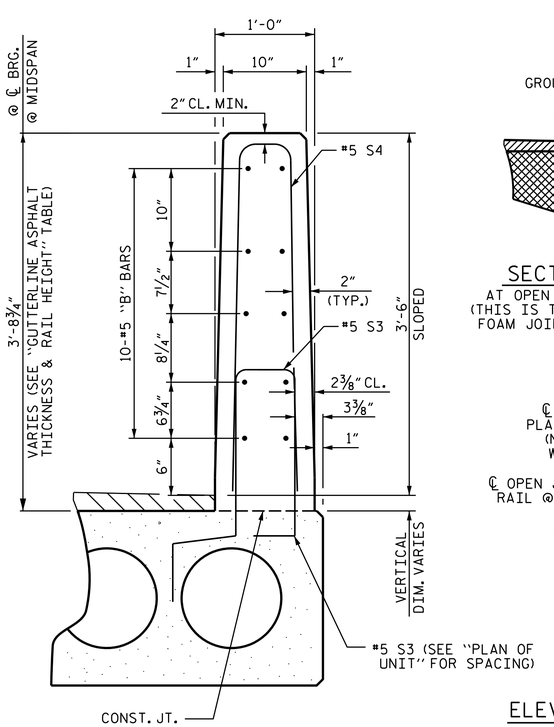

VERTICAL CONCRETE BARRIER RAIL SECTION

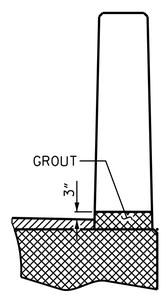

SECTION T-T

AT OPEN JOINT AT BENT (THIS IS TO BE USED WHERE FOAM JOINT IS NOT USED)

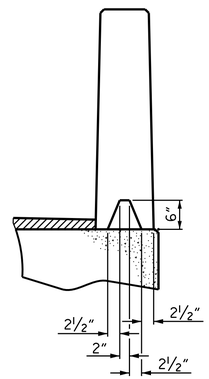

SECTION S-S

AT DAM IN OPEN JOINT (THIS IS TO BE USED ONLY WHEN SLIP FORM IS USED)

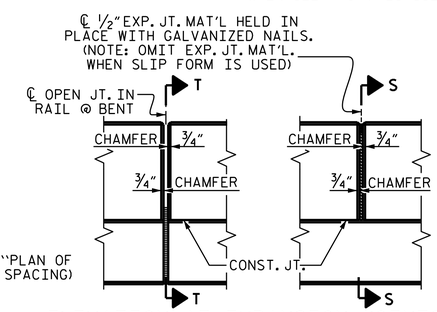

ELEVATION AT EXPANSION JOINTS

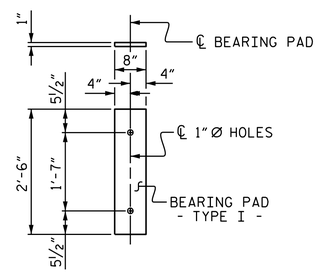

FIXED END

(TYPE I - 48 REQ'D)

ELASTOMERIC BEARING DETAILS

ELASTOMER IN ALL BEARINGS SHALL BE 50 DUROMETER HARDNESS.

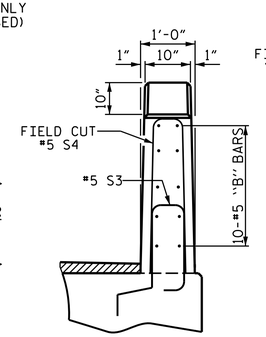

END VIEW

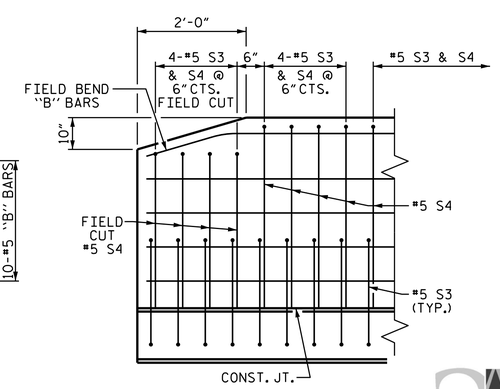

SIDE VIEW

END OF RAIL DETAILS

PROJECT NO. 17BP.6.R.73

BLADEN COUNTY

STATION: 13+58.72 -L-

SHEET 3 OF 3

STATE OF NORTH CAROLINA
DEPARTMENT OF TRANSPORTATION
RALEIGH

STANDARD
3'-0" X 1'-9"
PRESTRESSED CONCRETE
CORED SLAB UNIT
90° SKEW

DocuSigned by: D794597C456A4F7...
NORTH CAROLINA PROFESSIONAL SEAL 14463 ENGINEER TED L. BARTELT
1/24/2019

1998 2018
ALPHA & OMEGA GROUP
CIVIL | STRUCTURAL | WATER RESOURCES
4601 Lake Boone Trail Suite 3C Raleigh, NC 27607
Phone 919 981 0310 Fax 919 981 0451
www.aogroup.com Firm License No. C-1684
A&O PROJECT NO. 2017.025

REFERENCE NO. 1-8

DOCUMENT NOT CONSIDERED FINAL UNLESS ALL SIGNATURES COMPLETED

REVISIONS						SHEET NO.
NO.	BY:	DATE:	NO.	BY:	DATE:	S1-8
1			3			TOTAL SHEETS
2			4			17

DRAWN BY : S.G.S. DATE : 01/25/18
CHECKED BY : S.K.C. DATE : 02/07/18
DESIGN ENGINEER OF RECORD: T.L.B. DATE : 09/04/18

$$$$$$SYSTIME$$$$$
$$$$$$$$$$$$$$$$$$$$$$$$DGN$$$$$$$$$$$$$$$$$$$$$$$$
$$$$USERNAME$$$$

STD. NO. 21" PCS3_36_90S

DocuSign Envelope ID: 3D876990-CC3A-4700-9A79-5976E5602A95

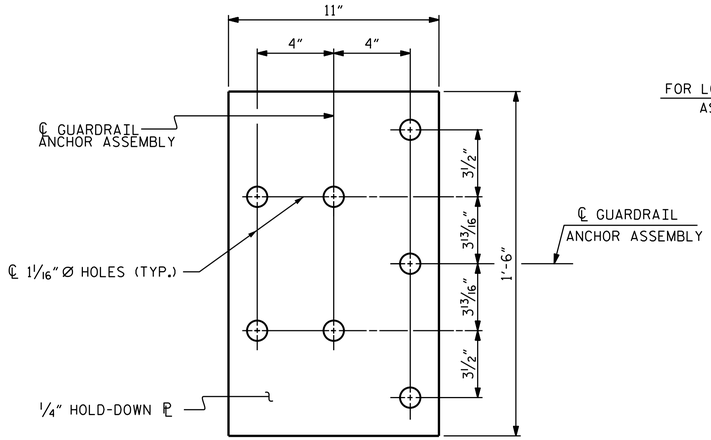

PLAN

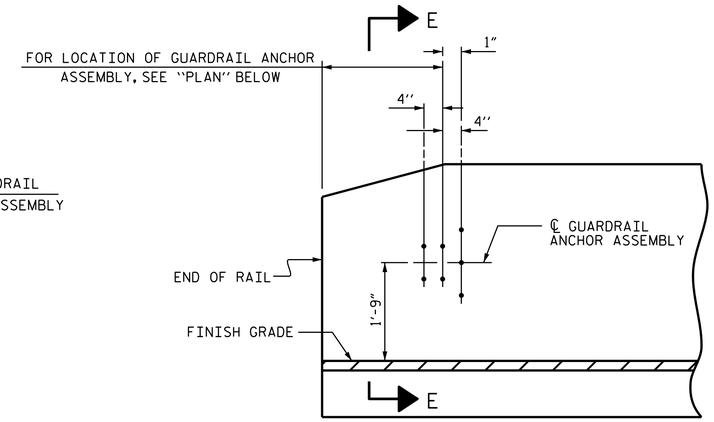

ELEVATION

NOTES

THE GUARDRAIL ANCHOR ASSEMBLY SHALL CONSIST OF A 1/4" HOLD DOWN PLATE AND 7 - 7/8" Ø BOLTS WITH NUTS AND WASHERS.

THE HOLD-DOWN PLATE SHALL CONFORM TO AASHTO M270 GRADE 36. AFTER FABRICATION, THE HOLD-DOWN PLATE SHALL BE HOT-DIP GALVANIZED IN ACCORDANCE WITH AASHTO M111.

BOLTS SHALL CONFORM TO THE REQUIREMENTS OF ASTM A307 AND NUTS SHALL CONFORM TO THE REQUIREMENTS OF AASHTO M291. BOLTS, NUTS AND WASHERS SHALL BE GALVANIZED. (AT THE CONTRACTOR'S OPTION, STAINLESS STEEL BOLTS, NUTS AND WASHERS MAY BE USED AS AN ALTERNATE FOR THE 7/8" Ø GALVANIZED BOLTS, NUTS AND WASHERS. THEY SHALL CONFORM TO OR EXCEED THE MECHANICAL REQUIREMENTS OF ASTM A307. THE USE OF THIS ALTERNATE SHALL BE APPROVED BY THE ENGINEER.)

THE GUARDRAIL ANCHOR ASSEMBLY IS REQUIRED AT ALL POINTS WHERE APPROACH GUARDRAIL IS TO BE ATTACHED TO THE END OF BARRIER RAIL. FOR POINTS OF ATTACHMENT, SEE SKETCH.

AFTER INSTALLATION, THE EXPOSED THREAD OF THE BOLT SHALL BE BURRED WITH A SHARP POINTED TOOL.

THE COST OF THE GUARDRAIL ANCHOR ASSEMBLY SHALL BE INCLUDED IN THE UNIT CONTRACT PRICE BID FOR VERTICAL CONCRETE BARRIER RAIL.

THE VERTICAL REINFORCING BARS MAY BE SHIFTED SLIGHTLY IN THE VERTICAL CONCRETE BARRIER RAIL TO CLEAR ASSEMBLY BOLTS.

THE 1 1/4" Ø HOLES SHALL BE FORMED OR DRILLED WITH A CORE BIT. IMPACT TOOLS WILL NOT BE PERMITTED. ANY CONCRETE DAMAGED BY THIS WORK SHALL BE REPAIRED TO THE SATISFACTION OF THE ENGINEER.

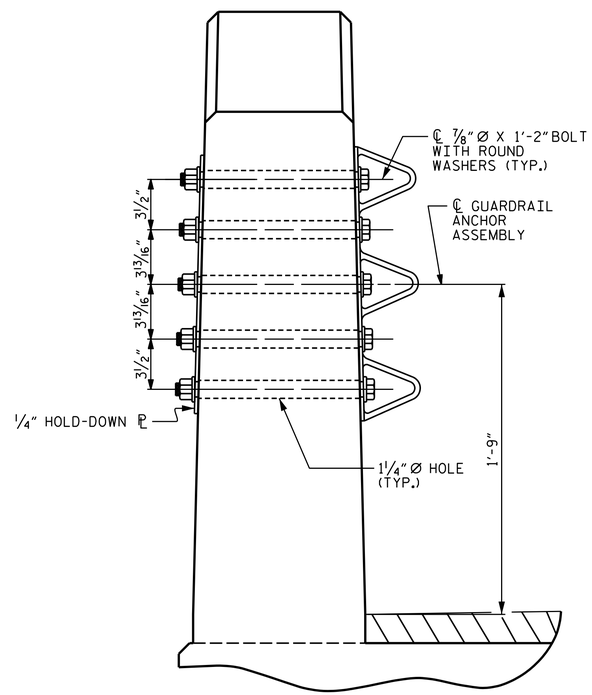

SECTION E-E

GUARDRAIL ANCHOR ASSEMBLY DETAILS

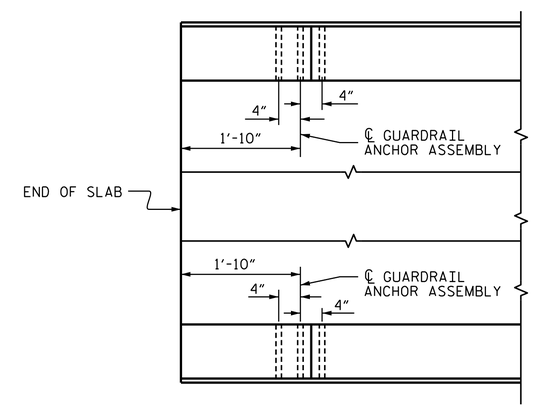

PLAN

LOCATION OF ANCHORS FOR GUARDRAIL

END BENT #1 SHOWN, END BENT #2 SIMILAR.

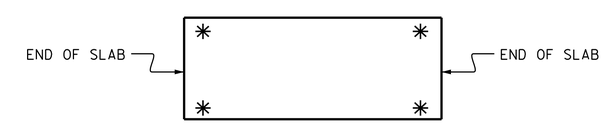

SKETCH SHOWING POINTS OF ATTACHMENT

✳ DENOTES GUARDRAIL ANCHOR ASSEMBLY

PROJECT NO. 17BP.6.R.73

BLADEN COUNTY

STATION: 13+58.72 -L-

STATE OF NORTH CAROLINA
DEPARTMENT OF TRANSPORTATION
RALEIGH

STANDARD
GUARDRAIL ANCHORAGE DETAILS
FOR VERTICAL CONCRETE BARRIER RAIL

DocuSigned by:
D794597C456A4F7...
1/24/2019

1998 2018
ALPHA & OMEGA GROUP
CIVIL | STRUCTURAL | WATER RESOURCES

4601 Lake Boone Trail Suite 3C Raleigh, NC 27607
Phone 919 981 0310 Fax 919 981 0451
www.aogroup.com Firm License No. C-1684
A&O PROJECT NO. 2017.025

REFERENCE NO. 1-9

DOCUMENT NOT CONSIDERED FINAL UNLESS ALL SIGNATURES COMPLETED

REVISIONS							
NO.	BY:	DATE:	NO.	BY:	DATE:	SHEET NO.	
1			3			S1-9	
2			4			TOTAL SHEETS	
						17	

DRAWN BY :	S.G.S.	DATE :	01/25/18
CHECKED BY :	S.K.C.	DATE :	02/07/18
DESIGN ENGINEER OF RECORD:	T.L.B.	DATE :	09/04/18

STD. NO. GRA3

$$$$$$SYSTIME$$$$$
$$$$$$$$$$$$$$$$$$$$$$$$DGN$$$$$$$$$$$$$$$$$$$$$$$$
$$$$USERNAME$$$$

DocuSign Envelope ID: 3D876990-CC3A-4700-9A79-5976E5602A95

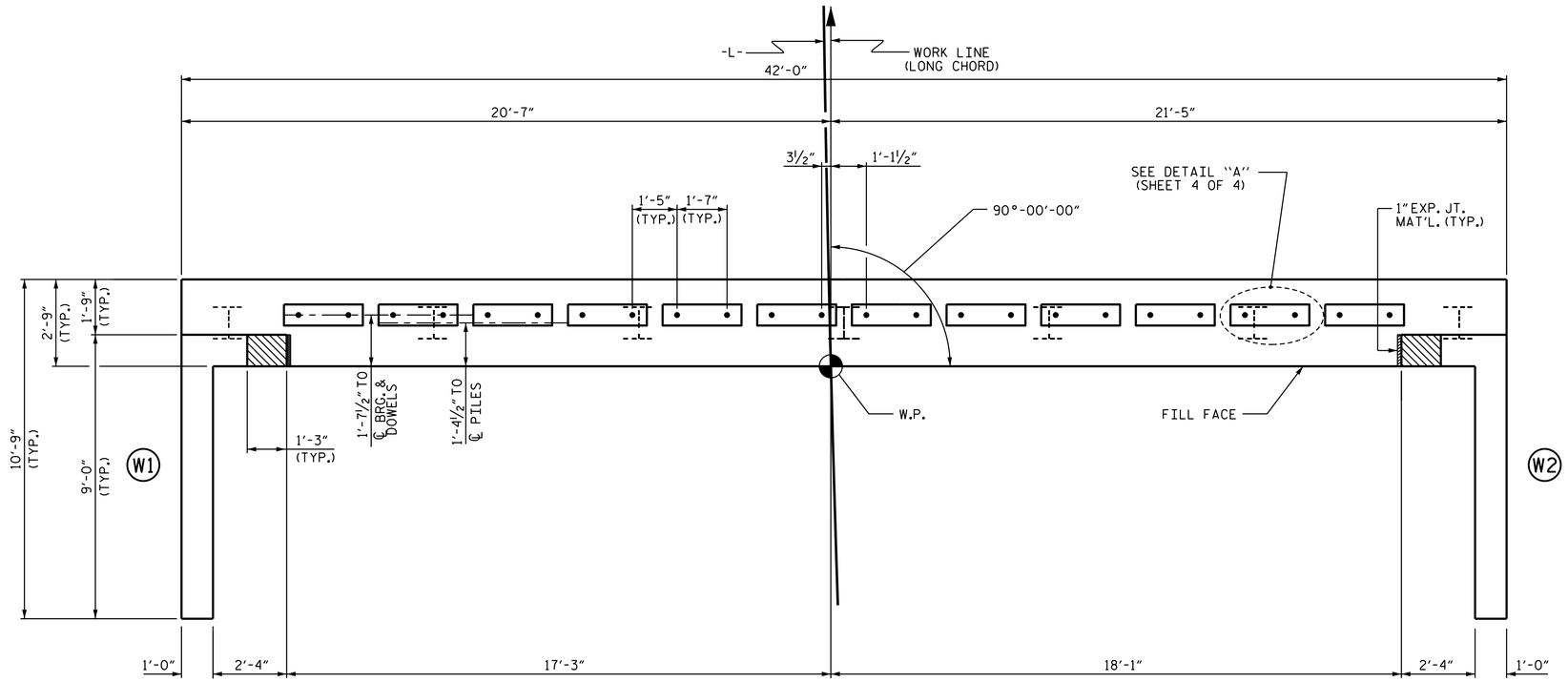

PLAN

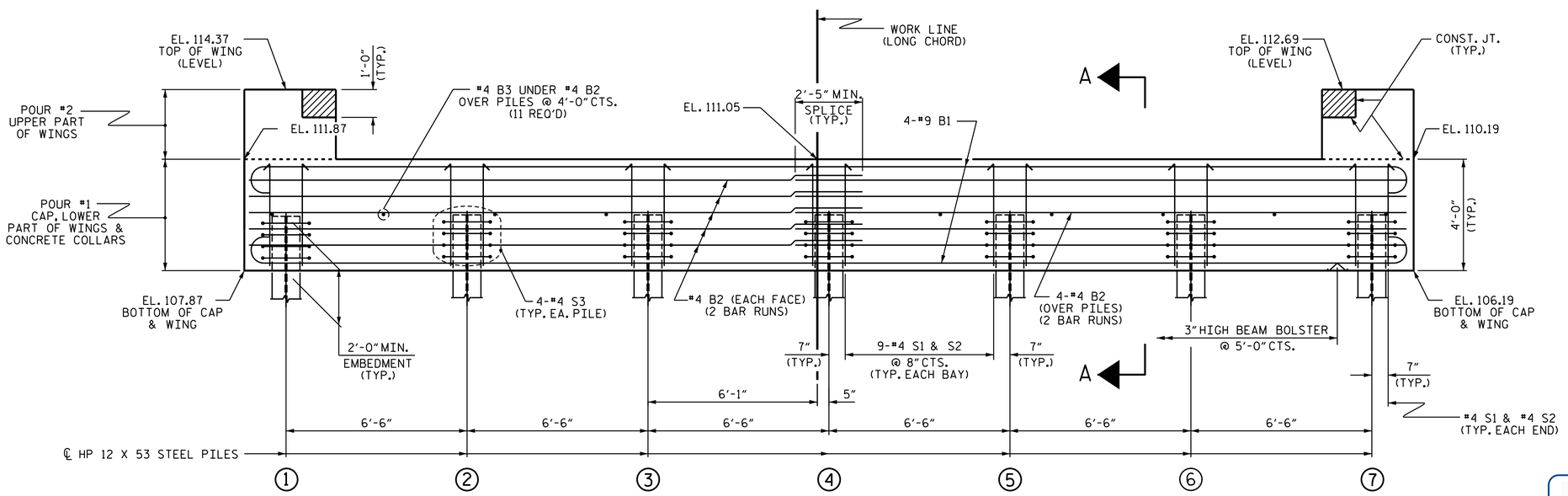

ELEVATION

WINGS NOT SHOWN FOR CLARITY.
FOR SECTION A-A, SEE SHEET 4 OF 4.
CONCRETE COLLARS FOR STEEL PILES NOT SHOWN IN PLAN AND ELEVATION VIEWS FOR CLARITY.
SEE "CORROSION PROTECTION FOR STEEL PILES DETAIL", SHEET 4 OF 4.

NOTES

STIRRUPS IN CAP MAY BE SHIFTED AS NECESSARY TO CLEAR DOWELS.

THE CONCRETE IN THE SHADED AREA OF THE WING SHALL BE POURED AFTER THE VERTICAL CONCRETE BARRIER RAIL IS CAST IF SLIP FORMING IS USED.

FOR PILE SPLICE DETAILS, SEE SHEET 4 OF 4.

FOR WING DETAILS, SEE SHEET 3 OF 4.

ALL DIMENSIONS ARE TO WORK LINE (LONG CHORD)

TOP OF PILE ELEVATIONS	
1	109.81
2	109.55
3	109.29
4	109.03
5	108.77
6	108.51
7	108.25

0.04 SLOPE

PROJECT NO. 17BP.6.R.73
BLADEN COUNTY
STATION: 13+58.72 -L-

SHEET 1 OF 4

STATE OF NORTH CAROLINA
DEPARTMENT OF TRANSPORTATION
RALEIGH

SUBSTRUCTURE

END BENT No. 1

DocuSigned by:
D794597C456A4F7...
1/24/2019

1998 20 2018
ALPHA & OMEGA GROUP
CIVIL | STRUCTURAL | WATER RESOURCES
4601 Lake Boone Trail Suite 3C Raleigh, NC 27607
Phone 919 981 0310 Fax 919 981 0451
www.aogroup.com Firm License No. C-1684
A&O PROJECT NO. 2017.025

REFERENCE NO. 1-10
DOCUMENT NOT CONSIDERED FINAL UNLESS ALL SIGNATURES COMPLETED

REVISIONS						SHEET NO.
NO.	BY:	DATE:	NO.	BY:	DATE:	S-10
1			3			TOTAL SHEETS
2			4			17

DRAWN BY : S.G.S. DATE : 01/30/18
CHECKED BY : S.K.C. DATE : 02/07/18
DESIGN ENGINEER OF RECORD: T.L.B. DATE : 09/04/18

$$$$$$SYSTIME$$$$$
$$$$$$$$$$$$$$$$$$$$DGN$$$$$$$$$$$$$$$$$$$$$$$$
$$$$USERNAME$$$$

STD. NO. EB_36_90S4

DocuSign Envelope ID: 3D876990-CC3A-4700-9A79-5976E5602A95

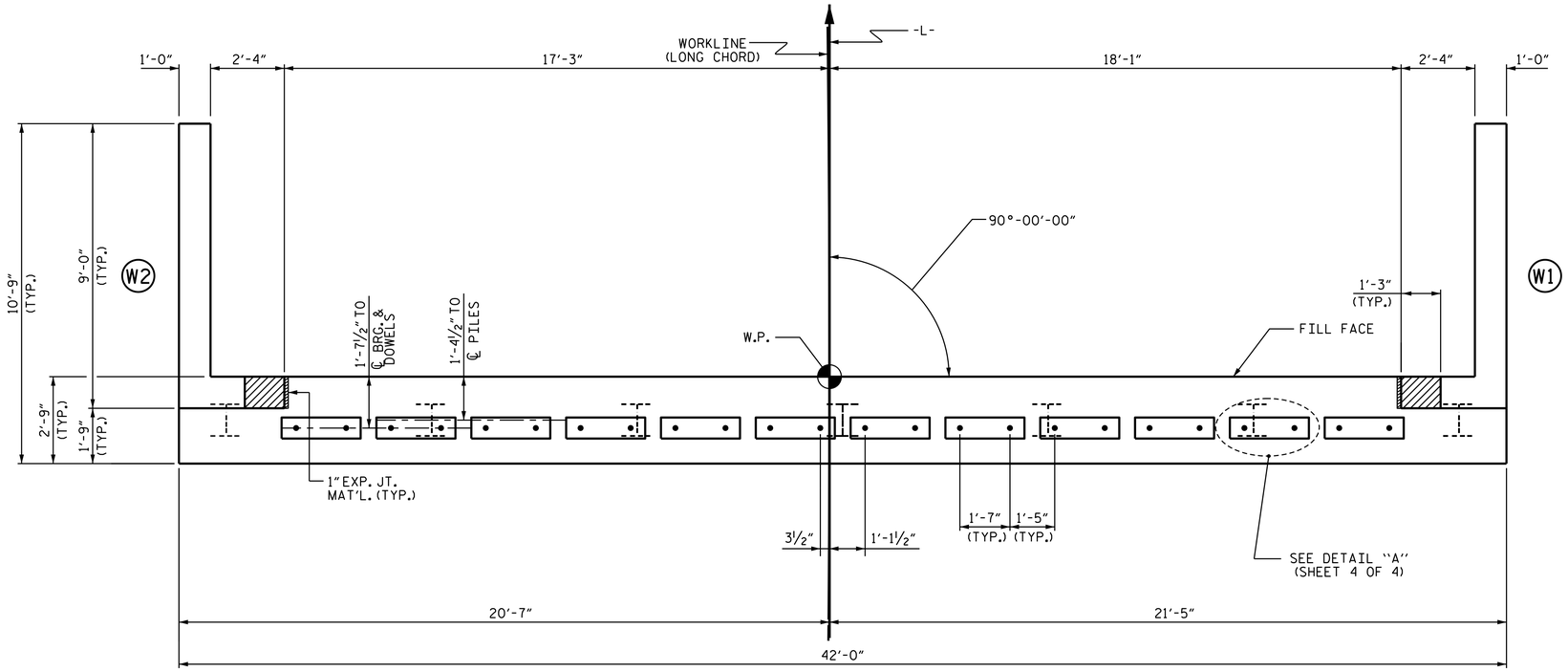

PLAN

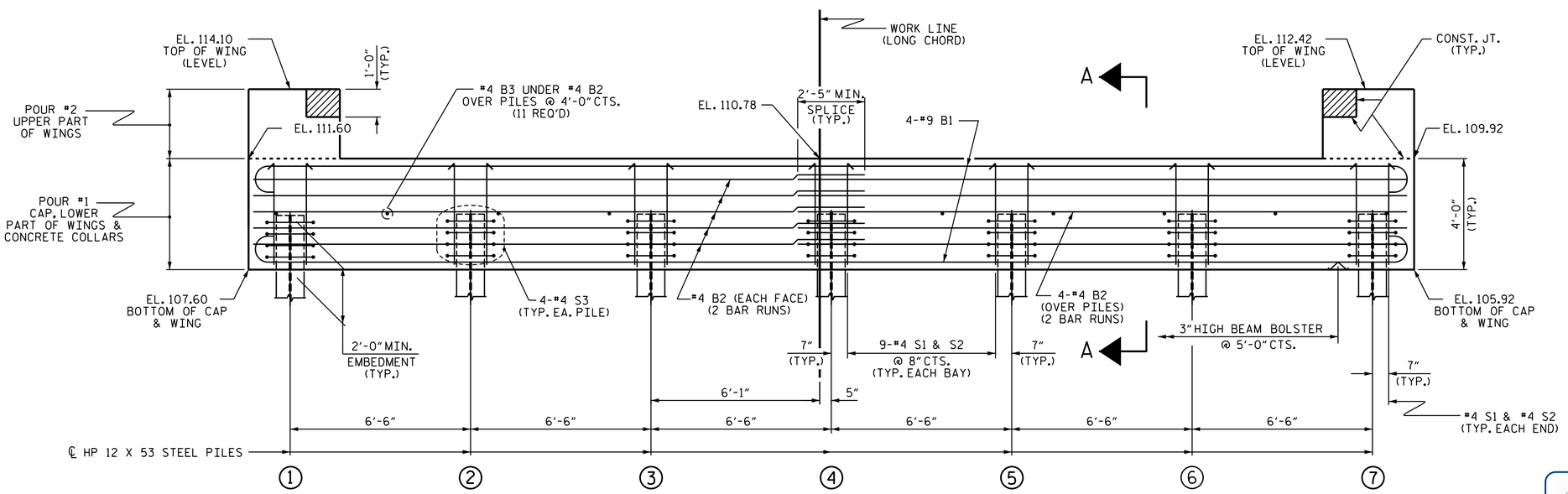

ELEVATION

WINGS NOT SHOWN FOR CLARITY.
FOR SECTION A-A, SEE SHEET 4 OF 4.
CONCRETE COLLARS FOR STEEL PILES NOT SHOWN IN PLAN AND ELEVATION VIEWS FOR CLARITY.
SEE "CORROSION PROTECTION FOR STEEL PILES DETAIL", SHEET 4 OF 4.

NOTES

STIRRUPS IN CAP MAY BE SHIFTED AS NECESSARY TO CLEAR DOWELS.

THE CONCRETE IN THE SHADED AREA OF THE WING SHALL BE POURED AFTER THE VERTICAL CONCRETE BARRIER RAIL IS CAST IF SLIP FORMING IS USED.

FOR PILE SPLICE DETAILS, SEE SHEET 4 OF 4.

FOR WING DETAILS, SEE SHEET 3 OF 4.

ALL DIMENSIONS ARE TO WORKLINE (LONG CHORD).

TOP OF PILE ELEVATIONS	
1	109.54
2	109.28
3	109.02
4	108.76
5	108.50
6	108.24
7	107.98

0.04 SLOPE

PROJECT NO. 17BP.6.R.73
BLADEN COUNTY
STATION: 13+58.72 -L-

SHEET 2 OF 4

STATE OF NORTH CAROLINA
DEPARTMENT OF TRANSPORTATION
RALEIGH

SUBSTRUCTURE

END BENT No. 2

DocuSigned by:
D794597C456A4F7...
1/24/2019

1998 20 2018
ALPHA & OMEGA GROUP
CIVIL | STRUCTURAL | WATER RESOURCES
4601 Lake Boone Trail Suite 3C Raleigh, NC 27607
Phone 919 981 0310 Fax 919 981 0451
www.aogroup.com Firm License No. C-1684
A&O PROJECT NO. 2017.025

REFERENCE NO. 1-11

DOCUMENT NOT CONSIDERED FINAL UNLESS ALL SIGNATURES COMPLETED

REVISIONS						SHEET NO.
NO.	BY:	DATE:	NO.	BY:	DATE:	S-11
1			3			TOTAL SHEETS
2			4			17

DRAWN BY :	S.G.S.	DATE :	01/30/18
CHECKED BY :	S.K.C.	DATE :	02/07/18
DESIGN ENGINEER OF RECORD:	T.L.B.	DATE :	09/04/18

$$$$$$SYSTIME$$$$$
$$$$$$$$$$$$$$$$$$$$DGN$$$$$$$$$$$$$$$$$$$$$$$$
$$$$USERNAME$$$$

STD. NO. EB_36_90S4

DocuSign Envelope ID: 3D876990-CC3A-4700-9A79-5976E5602A95

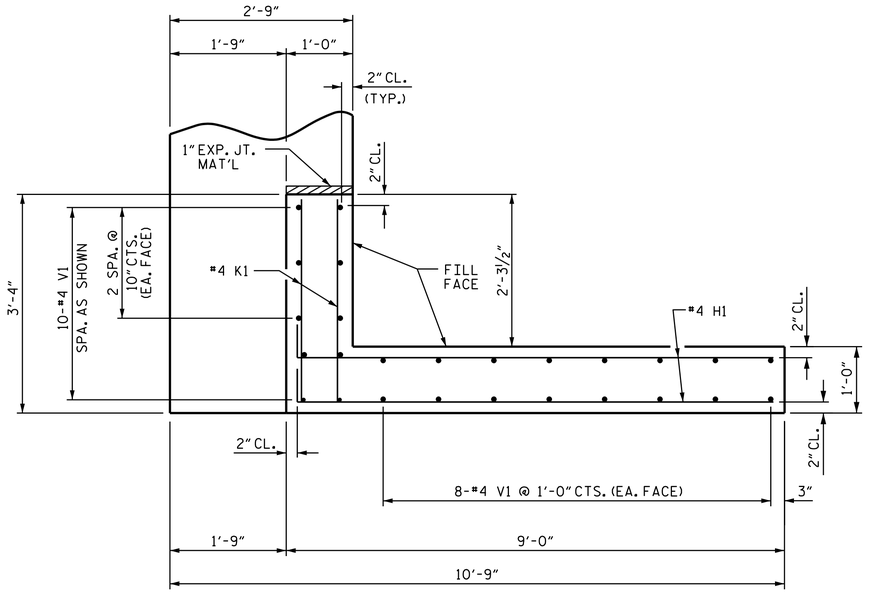

PLAN OF WING (W1)

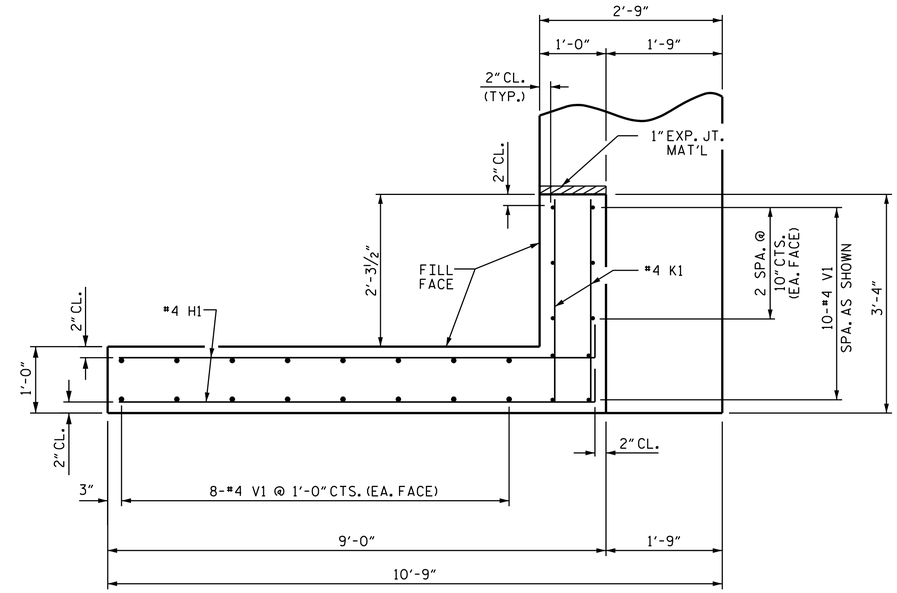

PLAN OF WING (W2)

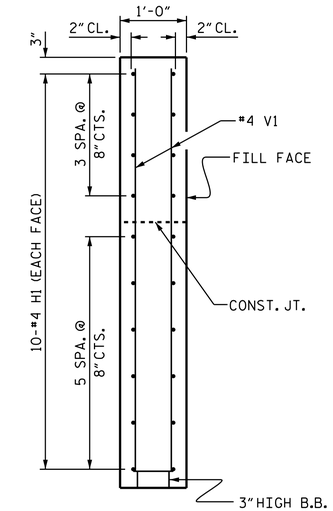

SECTION X-X

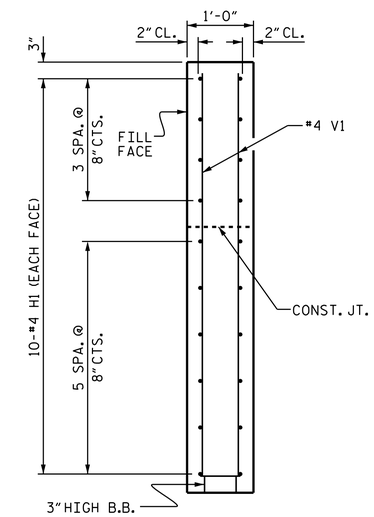

SECTION Y-Y

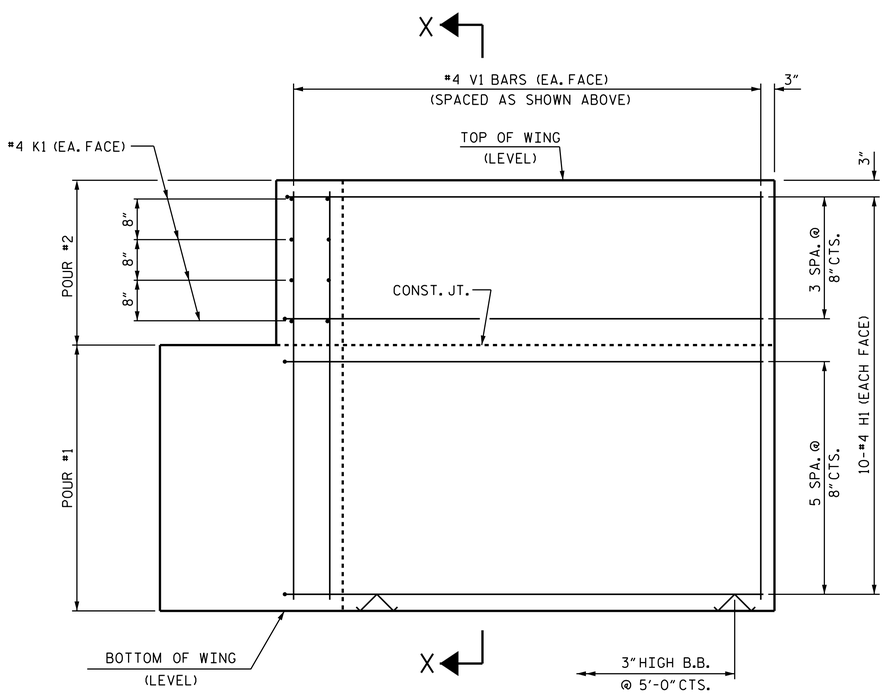

ELEVATION OF WING (W1)

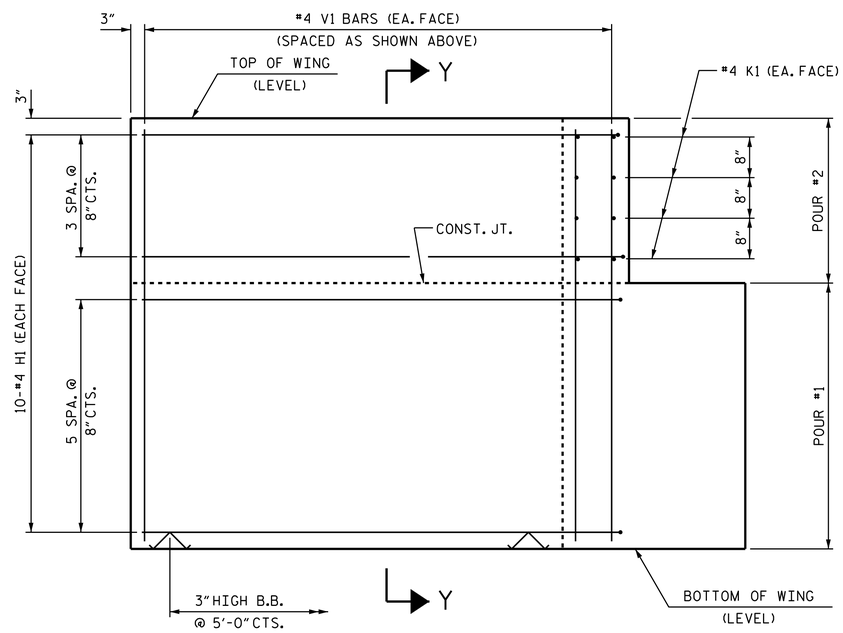

ELEVATION OF WING (W2)

WING DETAILS

PROJECT NO. 17BP.6.R.73

BLADEN COUNTY

STATION: 13+58.72 -L-

SHEET 3 OF 4

STATE OF NORTH CAROLINA
DEPARTMENT OF TRANSPORTATION
RALEIGH

SUBSTRUCTURE

END BENT
WING DETAILS

DocuSigned by:
D794597C456A4F7...
1/24/2019

1998 2018
ALPHA & OMEGA GROUP
CIVIL | STRUCTURAL | WATER RESOURCES
4601 Lake Boone Trail Suite 3C Raleigh, NC 27607
Phone 919 981 0310 Fax 919 981 0451
www.aogroup.com Firm License No. C-1684
A&O PROJECT NO. 2017.25

REFERENCE NO. 1-12

DOCUMENT NOT CONSIDERED FINAL UNLESS ALL SIGNATURES COMPLETED

REVISIONS						SHEET NO.
NO.	BY:	DATE:	NO.	BY:	DATE:	S-12
1			3			TOTAL SHEETS
2			4			17

DRAWN BY : S.G.S. DATE : 01/30/18
CHECKED BY : S.K.C. DATE : 02/07/18
DESIGN ENGINEER OF RECORD: T.L.B. DATE : 09/04/18

$$$$$$SYSTIME$$$$$
$$$$$$$$$$$$$$$$$$$$$$DGN$$$$$$$$$$$$$$$$$$$$$$
$$$$USERNAME$$$$

STD. NO. EB_36_90S4

DocuSign Envelope ID: 3D876990-CC3A-4700-9A79-5976E5602A95

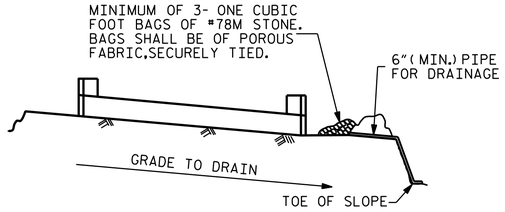

BAGGED STONE AND PIPE SHALL BE PLACED IMMEDIATELY AFTER COMPLETION OF END BENT EXCAVATION. PIPE MAY BE EITHER CONCRETE, CORRUGATED STEEL, CORRUGATED ALUMINUM ALLOY, OR CORRUGATED PLASTIC. PERFORATED PIPE WILL NOT BE ALLOWED.

BAGGED STONE SHALL REMAIN IN PLACE UNTIL THE ENGINEER DIRECTS THAT IT BE REMOVED. THE CONTRACTOR SHALL REMOVE AND DISPOSE OF SILT ACCUMULATIONS AT BAGGED STONE WHEN SO DIRECTED BY THE ENGINEER. BAGS SHALL BE REMOVED AND REPLACED WHENEVER THE ENGINEER DETERMINES THAT THEY HAVE DETERIORATED AND LOST THEIR EFFECTIVENESS.

NO SEPARATE PAYMENT WILL BE MADE FOR THIS WORK AND THE ENTIRE COST OF THIS WORK SHALL BE INCLUDED IN THE UNIT CONTRACT PRICE BID FOR THE SEVERAL PAY ITEMS.

TEMPORARY DRAINAGE AT END BENT

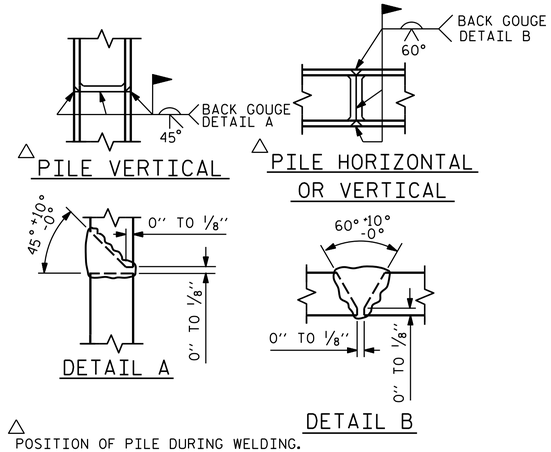

△ POSITION OF PILE DURING WELDING.

PILE SPLICE DETAILS

SCALE- 7/16" = 1'-0"

BAR TYPES

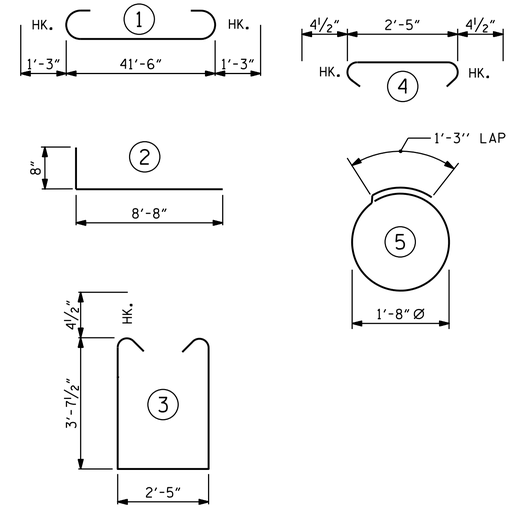

ALL BAR DIMENSIONS ARE OUT TO OUT.

END BENT No. 1	END BENT No. 2
HP 12 X 53 STEEL PILES NO: 7 LIN. FT.= 350	HP 12 X 53 STEEL PILES NO: 7 LIN. FT.= 385
PILE DRIVING EQUIPMENT SETUP FOR HP 12 X 53 STEEL PILES NO: 7	PILE DRIVING EQUIPMENT SETUP FOR HP 12 X 53 STEEL PILES NO: 7
PILE REDRIVES NO: 3	PILE REDRIVES NO: 3

BILL OF MATERIAL
FOR ONE END BENT

BAR	NO.	SIZE	TYPE	LENGTH	WEIGHT
B1	8	#9	1	44'-0"	1197
B2	28	#4	STR	22'-1"	413
B3	11	#4	STR	2'-5"	18
D1	24	#6	STR	1'-6"	54
H1	40	#4	2	9'-4"	249
K1	16	#4	STR	2'-11"	31
S1	56	#4	3	10'-5"	390
S2	56	#4	4	3'-2"	118
S3	28	#4	5	6'-6"	122
V1	52	#4	STR	6'-2"	214

REINFORCING STEEL (FOR ONE END BENT) 2806 LBS.

CLASS A CONCRETE BREAKDOWN (FOR ONE END BENT)

POUR #1 CAP, LOWER PART OF WINGS & COLLARS 20.7 C.Y.

POUR #2 UPPER PART OF WINGS 2.1 C.Y.

TOTAL CLASS A CONCRETE 22.8 C.Y.

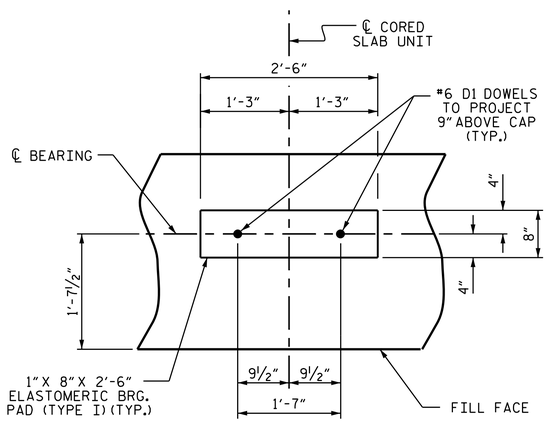

DETAIL "A"

(END BENT No. 1 SHOWN, END BENT No. 2 SIMILAR BY ROTATION)

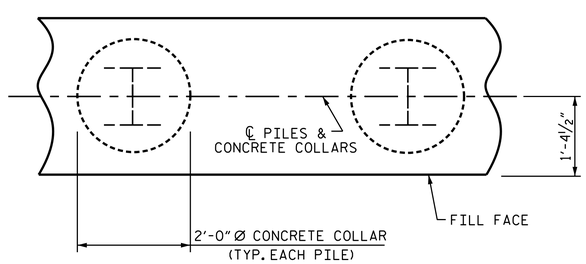

PLAN

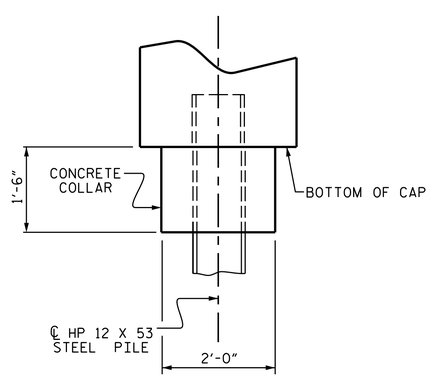

ELEVATION

CORROSION PROTECTION FOR STEEL PILES DETAIL

(END BENT No. 1 SHOWN, END BENT No. 2 SIMILAR BY ROTATION)

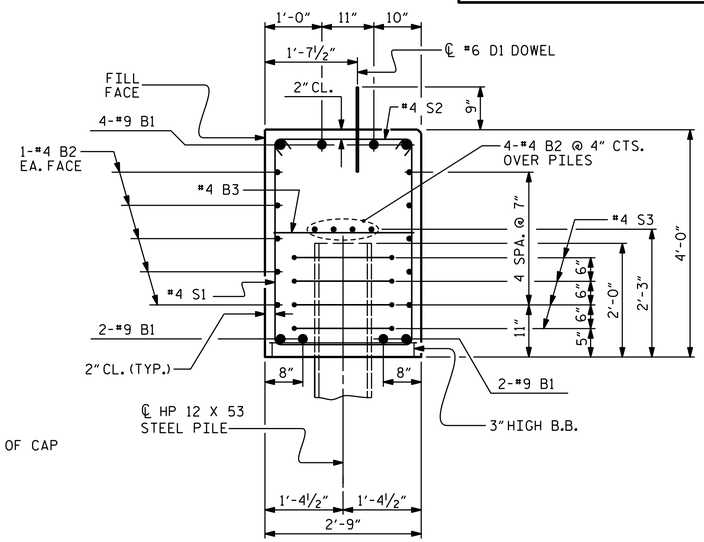

SECTION A-A

(CONCRETE COLLAR NOT SHOWN FOR CLARITY. SEE "CORROSION PROTECTION FOR STEEL PILES DETAIL.")

PROJECT NO. 17BP.6.R.73

BLADEN COUNTY

STATION: 13+58.72 -L-

SHEET 4 OF 4

STATE OF NORTH CAROLINA
DEPARTMENT OF TRANSPORTATION
RALEIGH

SUBSTRUCTURE

END BENT No. 1 & 2 DETAILS

DocuSigned by: D794597C456A4F7...

1/24/2019

1998 20 2018
ALPHA & OMEGA GROUP
CIVIL | STRUCTURAL | WATER RESOURCES

4601 Lake Boone Trail Suite 3C Raleigh, NC 27607
Phone 919 981 0310 Fax 919 981 0451
www.aogroup.com Firm License No. C-1684
A&O PROJECT NO. 2017.025

REFERENCE NO. 1-13

DOCUMENT NOT CONSIDERED FINAL UNLESS ALL SIGNATURES COMPLETED

REVISIONS							
NO.	BY:	DATE:	NO.	BY:	DATE:	SHEET NO. S-13	
1			3			TOTAL SHEETS 17	
2			4				

DRAWN BY :	S.G.S.	DATE :	01/30/18
CHECKED BY :	S.K.C.	DATE :	02/07/18
DESIGN ENGINEER OF RECORD:	T.L.B.	DATE :	09/04/18

$$$$$$$SYSTIME$$$$$
$$$$$$$$$$$$$$$$$$$$DGN$$$$$$$$$$$$$$$$$$$$$$$$
$$$$USERNAME$$$$

STD. NO. EB_36_90S4

DocuSign Envelope ID: 3D876990-CC3A-4700-9A79-5976E5602A95

NOTES

STIRRUPS IN CAP MAY BE SHIFTED AS NECESSARY TO CLEAR DOWELS.

★ INVERT ALTERNATE STIRRUPS.

GALVANIZE THE TOP OF EACH INTERIOR BENT PILE A MINIMUM OF 40 FEET. GALVANIZE IN ACCORDANCE WITH SECTION 1076 OF THE STANDARD SPECIFICATIONS.

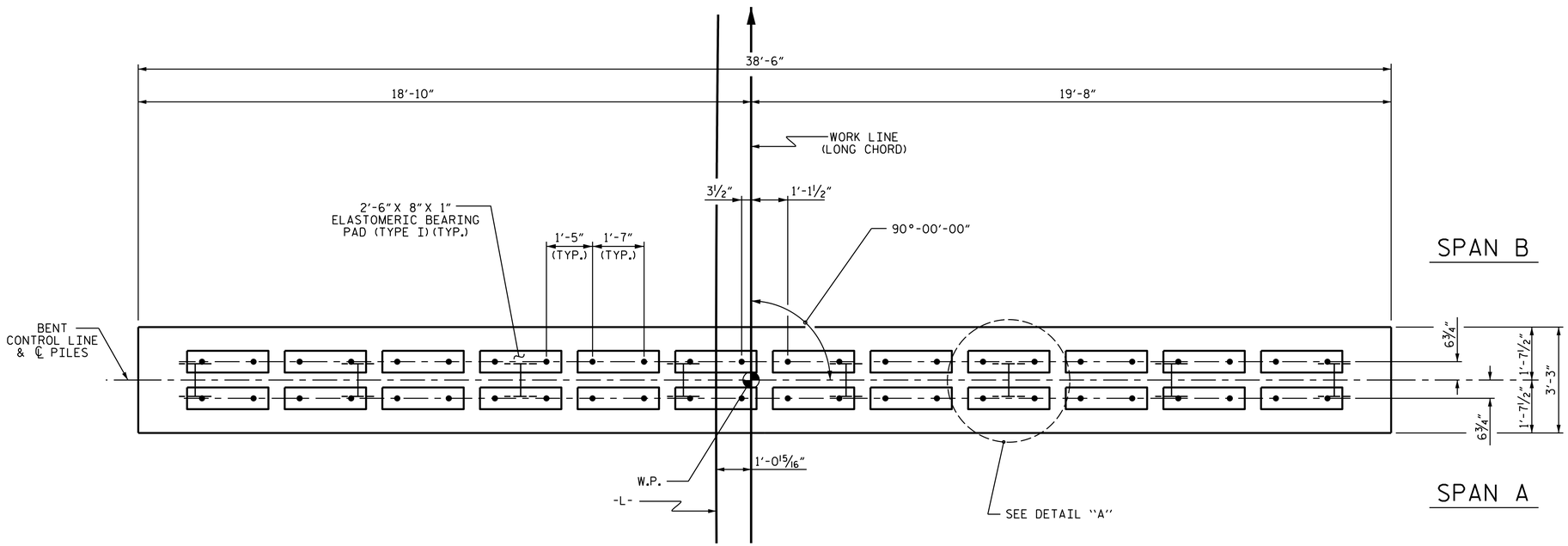

PLAN

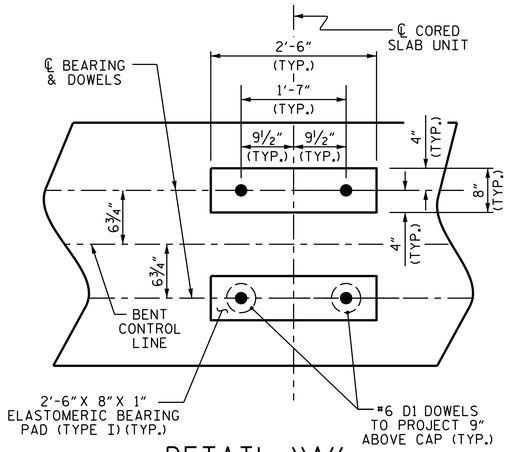

DETAIL "A"

(DIMENSIONS ARE TYPICAL EACH BEARING)

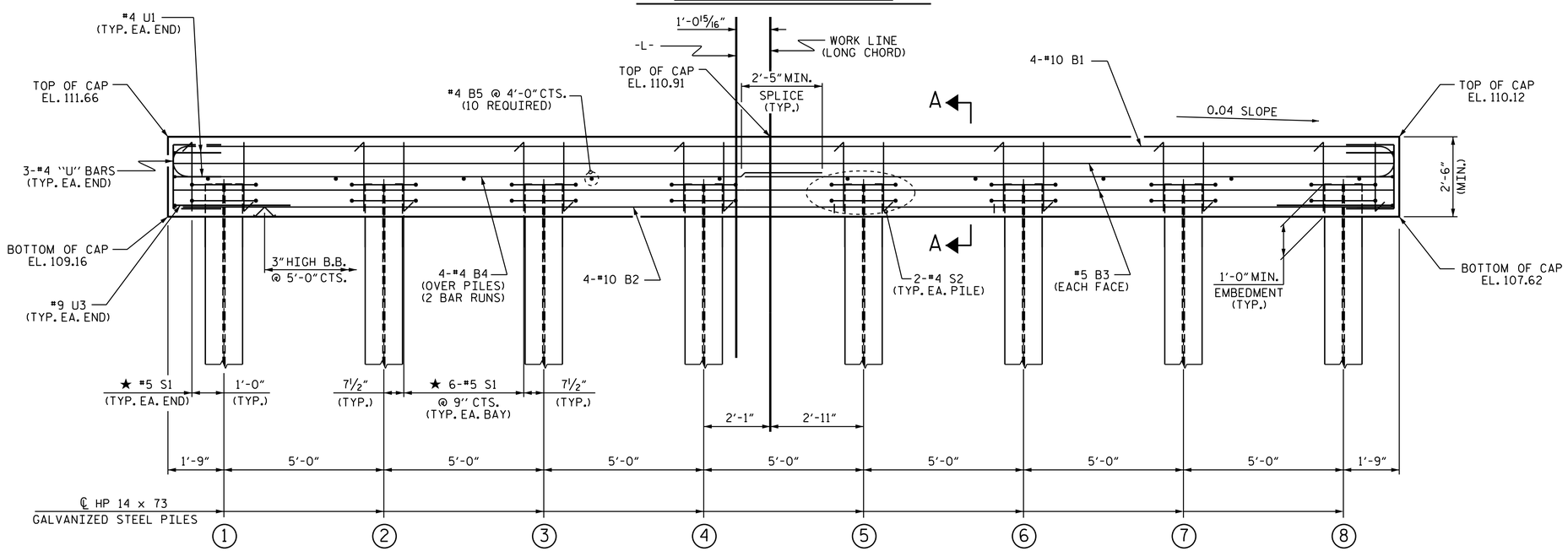

ELEVATION

FOR SECTION A-A, SEE SHEET 2 OF 2

TOP OF PILE ELEVATIONS	
1	110.09
2	109.89
3	109.69
4	109.49
5	109.29
6	109.09
7	108.89
8	108.69

PROJECT NO. 17BP.6.R.73

BLADON COUNTY

STATION: 13+58.72 -L-

SHEET 1 OF 2

STATE OF NORTH CAROLINA
DEPARTMENT OF TRANSPORTATION
RALEIGH

SUBSTRUCTURE

BENT No. 1

DRAWN BY : S.G.S. DATE : 01/30/18
CHECKED BY : S.K.C. DATE : 02/07/18
DESIGN ENGINEER OF RECORD: T.L.B. DATE : 09/04/18

1998 2018
ALPHA & OMEGA GROUP
CIVIL | STRUCTURAL | WATER RESOURCES
4601 Lake Boone Trail Suite 3C Raleigh, NC 27607
Phone 919 981 0310 Fax 919 981 0451
www.aogroup.com Firm License No. C-1684
A&O PROJECT NO. 2017.025

DocuSigned by:
D794597C456A4F7...
1/24/2019

REFERENCE NO. 1-14

DOCUMENT NOT CONSIDERED FINAL UNLESS ALL SIGNATURES COMPLETED

REVISIONS								SHEET NO.
NO.	BY:	DATE:	NO.	BY:	DATE:			S-14
1			3					TOTAL SHEETS
2			4					17

$$$$$$SYSTIME$$$$$
$$$$$$$$$$$$$$$$$$$$$$$$DGN$$$$$$$$$$$$$$$$$$$$$$$$
$$$$USERNAME$$$$

STD. NO. 14" HP_BT_36_90S_<60'

DocuSign Envelope ID: 3D876990-CC3A-4700-9A79-5976E5602A95

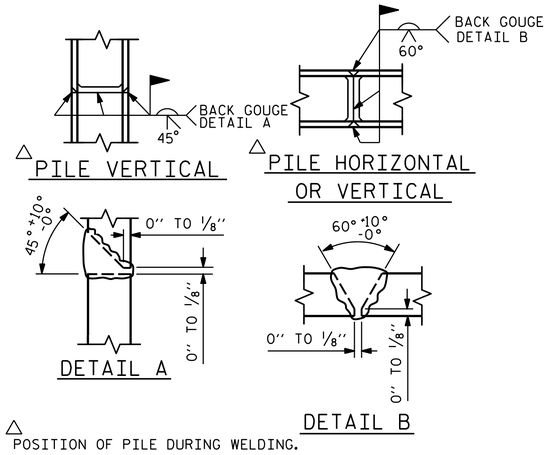

PILE SPLICE DETAILS

BAR TYPES

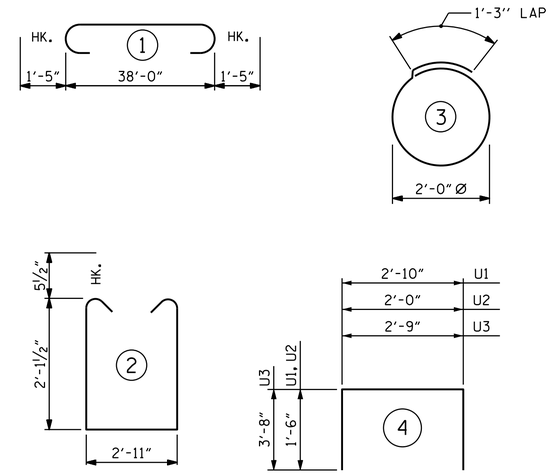

ALL BAR DIMENSIONS ARE OUT TO OUT.

BILL OF MATERIAL
FOR ONE BENT

BAR	NO.	SIZE	TYPE	LENGTH	WEIGHT
B1	4	#10	1	40'-10"	703
B2	4	#10	STR	38'-2"	657
B3	4	#5	STR	38'-2"	159
B4	8	#4	STR	20'-4"	109
B5	10	#4	STR	2'-11"	19
D1	48	#6	STR	1'-6"	108
S1	44	#5	2	8'-1"	371
S2	16	#4	3	7'-7"	81
U1	4	#4	4	5'-10"	16
U2	6	#4	4	5'-0"	20
U3	2	#9	4	10'-1"	69

REINFORCING STEEL (FOR ONE BENT) 2312 LBS

CLASS A CONCRETE BREAKDOWN (FOR ONE BENT)

TOTAL CLASS A CONCRETE 11.6 C.Y.

HP 14 X 73 GALVANIZED STEEL PILES (FOR ONE BENT)

No. 8 LIN. FT. 640

PILE DRIVING EQUIPMENT SETUP FOR HP 14 X 73 GALVANIZED STEEL PILES (FOR ONE BENT) NO: 8

PILE REDRIVES NO: 4

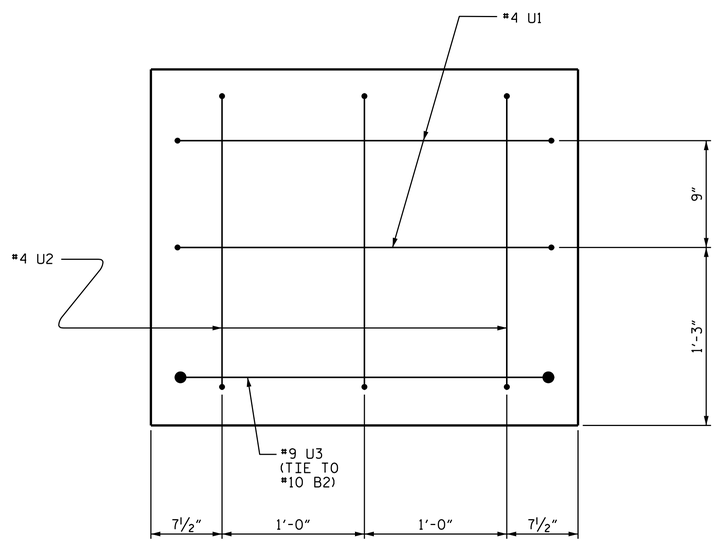

END OF CAP VIEW
(TYPICAL BOTH ENDS)

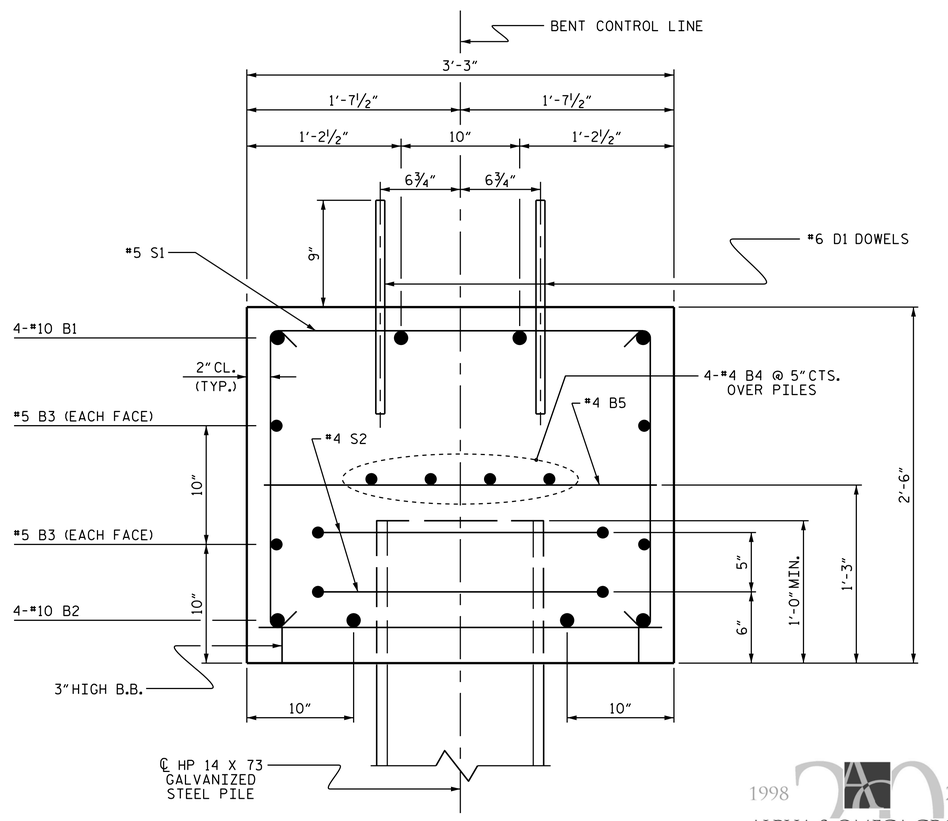

SECTION A-A

PROJECT NO. 17BP.6.R.73

BLADEN COUNTY

STATION: 13+58.72 -L-

SHEET 2 OF 2

STATE OF NORTH CAROLINA
DEPARTMENT OF TRANSPORTATION
RALEIGH

SUBSTRUCTURE

BENT No. 1

1998 2018
ALPHA & OMEGA GROUP
CIVIL | STRUCTURAL | WATER RESOURCES

4601 Lake Boone Trail Suite 3C Raleigh, NC 27607
Phone 919 981 0310 Fax 919 981 0451
www.aogroup.com Firm License No. C-1684

A&O PROJECT NO. 2017.025

DocuSigned by:
D794597C456A4F7...
1/24/2019

NORTH CAROLINA PROFESSIONAL SEAL 14430 ENGINEER TED L. BARTELL

REFERENCE NO. 1-15

DOCUMENT NOT CONSIDERED FINAL UNLESS ALL SIGNATURES COMPLETED

REVISIONS							SHEET NO.
NO.	BY:	DATE:	NO.	BY:	DATE:		S1-15
1			3				TOTAL SHEETS
2			4				17

DRAWN BY : S.G.S. DATE : 01/30/18
CHECKED BY : S.K.C. DATE : 02/07/18
DESIGN ENGINEER OF RECORD: T.L.B. DATE : 09/04/18

$$$$$$SYSTIME$$$$$
$$$$$$$$$$$$$$$$$$$$$$$$DGN$$$$$$$$$$$$$$$$$$$$$$$$
$$$$USERNAME$$$$

STD. NO. 14" HP_BT_36_90S_<60'

DocuSign Envelope ID: 3D876990-CC3A-4700-9A79-5976E5602A95

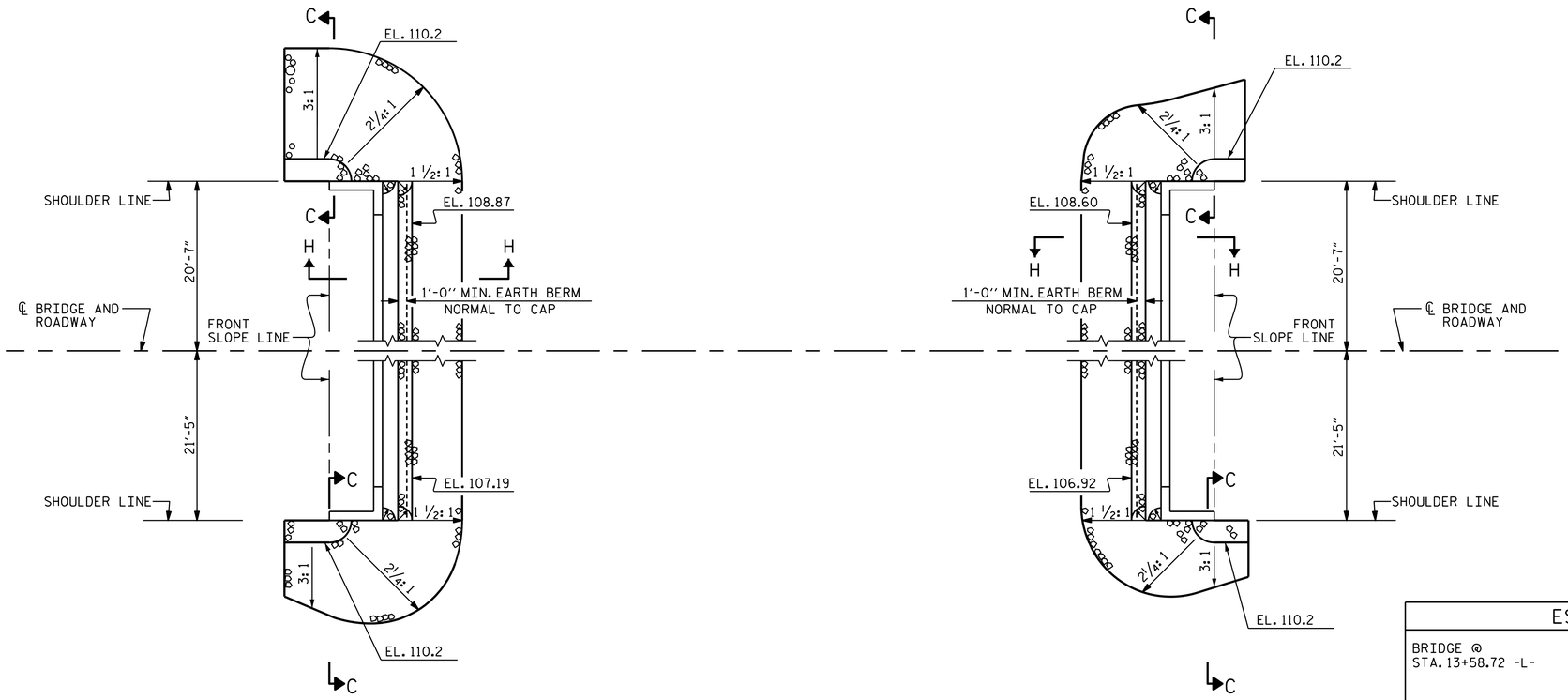

@ END BENT #1

@ END BENT #2

PLAN

ESTIMATED QUANTITIES		
BRIDGE @ STA. 13+58.72 -L-	RIP RAP CLASS II (2'-0" THICK)	GEOTEXTILE FOR DRAINAGE
	TONS	SQUARE YARDS
END BENT 1	214	237
END BENT 2	222	247

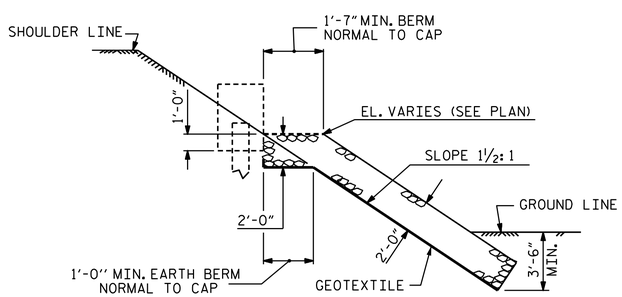

SECTION H-H

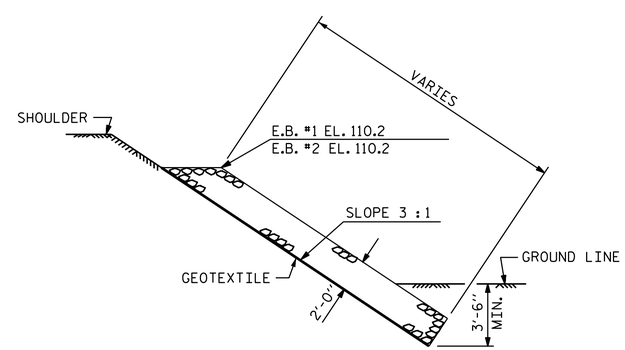

SECTION C-C

PROJECT NO. 17BP.6.R.73

BLADEN COUNTY

STATION: 13+58.72 -L-

STATE OF NORTH CAROLINA
DEPARTMENT OF TRANSPORTATION
RALEIGH

STANDARD

RIP RAP DETAILS

1998 2018
ALPHA & OMEGA GROUP
CIVIL | STRUCTURAL | WATER RESOURCES

4601 Lake Boone Trail Suite 3C Raleigh, NC 27607
Phone 919 981 0310 Fax 919 981 0451
www.aogroup.com Firm License No. C-1684
A&O PROJECT NO. 2017.025

DocuSigned by:
D794597C456A4F7...
1/24/2019

REFERENCE NO. 1-16

DOCUMENT NOT CONSIDERED FINAL UNLESS ALL SIGNATURES COMPLETED

REVISIONS								
NO.	BY:	DATE:	NO.	BY:	DATE:		SHEET NO.	
1			3				S1-16	
2			4				TOTAL SHEETS	
							17	

DRAWN BY :	S.G.S.	DATE :	01/31/18
CHECKED BY :	S.K.C.	DATE :	02/07/18
DESIGN ENGINEER OF RECORD:	T.L.B.	DATE :	09/04/18

$$$$$$$SYSTIME$$$$$
$$$$$$$$$$$$$$$$$$$$$$$$DGN$$$$$$$$$$$$$$$$$$$$$$$$
$$$$USERNAME$$$$

STD. NO. RR1 (Sht 2)

DocuSign Envelope ID: 3D876990-CC3A-4700-9A79-5976E5602A95

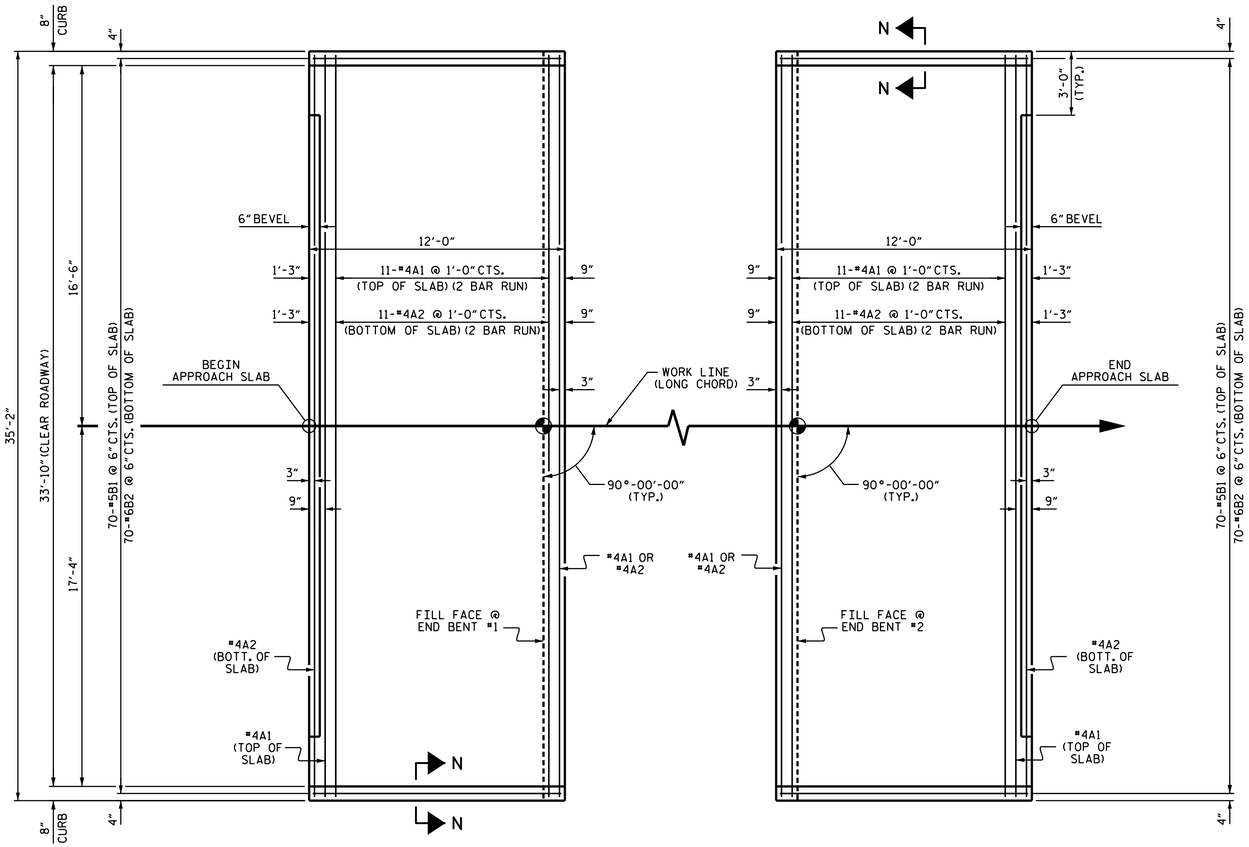

PLAN @ END BENT #1

PLAN @ END BENT #2

DIMENSIONS SHOWN ARE TYPICAL FOR BOTH APPROACH SLABS

NOTES

FOR BRIDGE APPROACH FILL INCLUDING GEOTEXTILE, 4"Ø DRAINAGE PIPE, AND SELECT MATERIAL BACKFILL, SEE ROADWAY PLANS.

GEOTEXTILE SHALL BE TYPE 1 IN ACCORDANCE WITH THE STANDARD SPECIFICATIONS SECTION 1056.

SELECT MATERIAL BACKFILL (CLASS V OR CLASS VI) SHALL BE IN ACCORDANCE WITH STANDARD SPECIFICATIONS SECTION 1016.

SELECT MATERIAL BACKFILL IS TO BE CONTINUOUS ALONG FILL FACE OF BACKWALL FROM OUTSIDE EDGE TO OUTSIDE EDGE OF APPROACH SLAB.

FOR THE 4"Ø DRAINAGE PIPE OUTLET(S), SEE ROADWAY STANDARD DRAWINGS.

AREA BETWEEN THE WINGWALL AND APPROACH SLAB SHALL BE GRADED TO DRAIN THE WATER AWAY FROM THE FILL FACE OF THE BRIDGE AND SHALL BE PAVED. SEE ROADWAY PLANS.

APPROACH SLAB GROOVING IS NOT REQUIRED.

BILL OF MATERIAL

APPROACH SLAB AT EB #1

BAR	NO.	SIZE	TYPE	LENGTH	WEIGHT
* A1	26	#4	STR	18'-6"	321
A2	26	#4	STR	18'-4"	318
* B1	70	#5	STR	11'-2"	815
B2	70	#6	STR	11'-8"	1227
REINFORCING STEEL				LBS.	1545
* EPOXY COATED REINFORCING STEEL				LBS.	1136
CLASS AA CONCRETE				C. Y.	20.1

APPROACH SLAB AT EB #2

BAR	NO.	SIZE	TYPE	LENGTH	WEIGHT
* A1	26	#4	STR	18'-6"	321
A2	26	#4	STR	18'-4"	318
* B1	70	#5	STR	11'-2"	815
B2	70	#6	STR	11'-8"	1227
REINFORCING STEEL				LBS.	1545
* EPOXY COATED REINFORCING STEEL				LBS.	1136
CLASS AA CONCRETE				C. Y.	20.1

SPLICE LENGTHS

BAR SIZE	EPOXY COATED	UNCOATED
#4	2'-0"	1'-9"
#5	2'-6"	2'-2"
#6	3'-10"	2'-7"

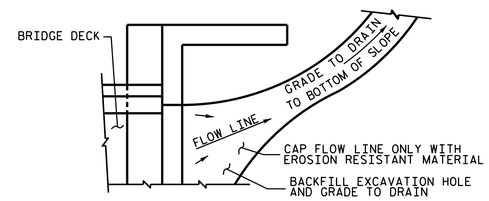

NOTE: IF THE APPROACH SLAB IS NOT CONSTRUCTED IMMEDIATELY AFTER THE BACKFILLING OF THE END BENT EXCAVATION, GRADE TO DRAIN TO THE BOTTOM OF THE SLOPE AND PROVIDE EROSION RESISTANT MATERIAL, SUCH AS FIBERGLASS ROVING OR AS DIRECTED BY THE ENGINEER TO PREVENT SOIL EROSION AND TO PROTECT THE AREA ADJACENT TO THE STRUCTURE. THE CONTRACTOR WILL BE REQUIRED TO REMOVE THESE MATERIALS PRIOR TO CONSTRUCTION OF THE APPROACH SLAB.

TEMPORARY DRAINAGE DETAIL

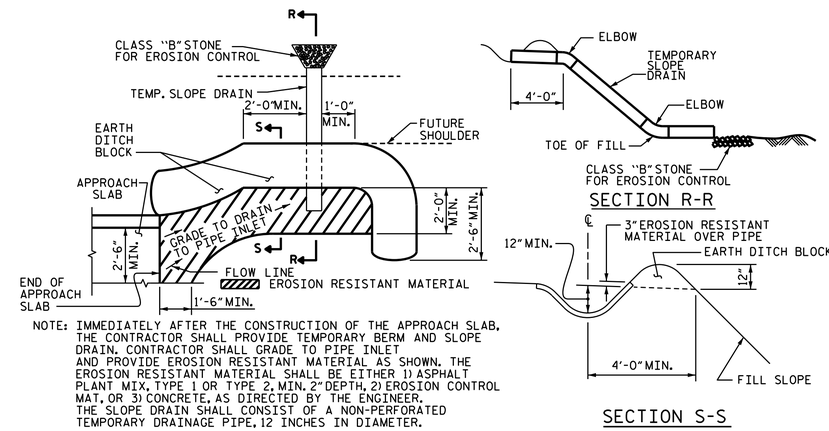

NOTE: IMMEDIATELY AFTER THE CONSTRUCTION OF THE APPROACH SLAB, THE CONTRACTOR SHALL PROVIDE TEMPORARY BERM AND SLOPE DRAIN. CONTRACTOR SHALL GRADE TO PIPE INLET AND PROVIDE EROSION RESISTANT MATERIAL AS SHOWN. THE EROSION RESISTANT MATERIAL SHALL BE EITHER 1) ASPHALT PLANT MIX, TYPE 1 OR TYPE 2, MIN. 2" DEPTH, 2) EROSION CONTROL MAT, OR 3) CONCRETE, AS DIRECTED BY THE ENGINEER. THE SLOPE DRAIN SHALL CONSIST OF A NON-PERFORATED TEMPORARY DRAINAGE PIPE, 12 INCHES IN DIAMETER.

PLAN VIEW

TEMPORARY BERM AND SLOPE DRAIN DETAILS

(TO BE USED WHEN SHOULDER BERM GUTTER IS REQUIRED)

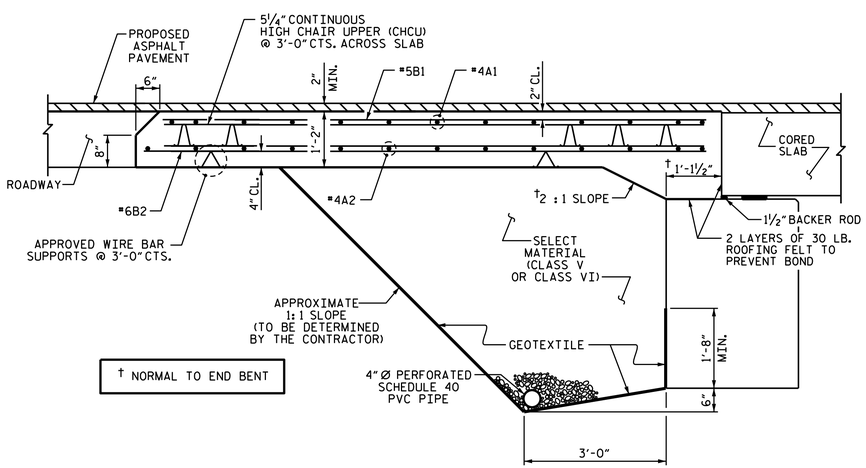

† NORMAL TO END BENT

SECTION THRU SLAB

(TYPE II - MODIFIED APPROACH FILL)

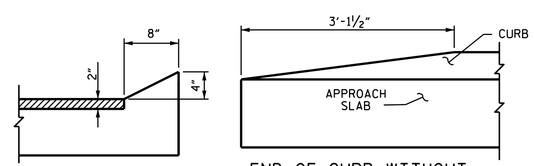

SECTION N-N

END OF CURB WITHOUT SHOULDER BERM GUTTER

CURB DETAILS

PROJECT NO. 17BP.6.R.73

BLADEN COUNTY

STATION: 13+58.72 -L-

STATE OF NORTH CAROLINA
DEPARTMENT OF TRANSPORTATION
RALEIGH

STANDARD
BRIDGE APPROACH SLAB
FOR PRESTRESSED CONCRETE
CORED SLAB UNIT
(SUB-REGIONAL TIER)
90° SKEW

ALPHA & OMEGA GROUP
CIVIL | STRUCTURAL | WATER RESOURCES
1998 2018
4601 Lake Boone Trail Suite 3C Raleigh, NC 27607
Phone 919 981 0310 Fax 919 981 0451
www.aogroup.com Firm License No. C-1684
A&O PROJECT NO. 2017.025

DocuSigned by:
D794597C456A4F7...
1/24/2019

REFERENCE NO. 1-17

DOCUMENT NOT CONSIDERED FINAL UNLESS ALL SIGNATURES COMPLETED

REVISIONS						
NO.	BY:	DATE:	NO.	BY:	DATE:	
1			3			
2			4			

SHEET NO. S-17

TOTAL SHEETS 17

DRAWN BY :	S.G.S.	DATE :	01/31/18
CHECKED BY :	S.K.C.	DATE :	02/07/18
DESIGN ENGINEER OF RECORD:	T.L.B.	DATE :	09/04/18

$$$$$$SYSTIME$$$$$
$$$$$$$$$$$$$$$$$$$$$$$$DGN$$$$$$$$$$$$$$$$$$$$$$$$
$$$$USERNAME$$$$

STD. NO. BAS_36_90S

DocuSign Envelope ID: 3D876990-CC3A-4700-9A79-5976E5602A95

STANDARD NOTES

DESIGN DATA:

SPECIFICATIONS	A.A.S.H.T.O. (CURRENT)
LIVE LOAD	SEE PLANS
IMPACT ALLOWANCE	SEE A.A.S.H.T.O.
STRESS IN EXTREME FIBER OF STRUCTURAL STEEL - AASHTO M270 GRADE 36	20,000 LBS. PER SQ. IN.
- AASHTO M270 GRADE 50W	27,000 LBS. PER SQ. IN.
- AASHTO M270 GRADE 50	27,000 LBS. PER SQ. IN.
REINFORCING STEEL IN TENSION - GRADE 60	24,000 LBS. PER SQ. IN.
CONCRETE IN COMPRESSION	1,200 LBS. PER SQ. IN.
CONCRETE IN SHEAR	SEE A.A.S.H.T.O.
STRUCTURAL TIMBER - TREATED OR UNTREATED EXTREME FIBER STRESS	1,800 LBS. PER SQ. IN.
COMPRESSION PERPENDICULAR TO GRAIN OF TIMBER	375 LBS. PER SQ. IN.
EQUIVALENT FLUID PRESSURE OF EARTH	30 LBS. PER CU. FT. (MINIMUM)

MATERIAL AND WORKMANSHIP:

EXCEPT AS MAY OTHERWISE BE SPECIFIED ON PLANS OR IN THE SPECIAL PROVISIONS, ALL MATERIAL AND WORKMANSHIP SHALL BE IN ACCORDANCE WITH THE 2018 "STANDARD SPECIFICATIONS FOR ROADS AND STRUCTURES" OF THE N. C. DEPARTMENT OF TRANSPORTATION.

STEEL SHEET PILING FOR PERMANENT OR TEMPORARY APPLICATIONS SHALL BE HOT ROLLED.

CONCRETE:

UNLESS OTHERWISE REQUIRED ON PLANS, CLASS A CONCRETE SHALL BE USED FOR ALL PORTIONS OF ALL STRUCTURES WITH THE EXCEPTION THAT: CLASS AA CONCRETE SHALL BE USED IN BRIDGE SUPERSTRUCTURES, ABUTMENT BACKWALLS, AND APPROACH SLABS; AND CLASS B CONCRETE SHALL BE USED FOR SLOPE PROTECTION AND RIP RAP.

CONCRETE CHAMFERS:

UNLESS OTHERWISE NOTED ON THE PLANS, ALL EXPOSED CORNERS ON STRUCTURES SHALL BE CHAMFERED ¾" WITH THE FOLLOWING EXCEPTIONS: TOP CORNERS OF CURBS MAY BE ROUNDED TO 1½" RADIUS WHICH IS BUILT INTO CURB FORMS; CORNERS OF TRANSVERSE FLOOR EXPANSION JOINTS SHALL BE ROUNDED WITH A ¼" FINISHING TOOL UNLESS OTHERWISE REQUIRED ON PLANS; AND CORNERS OF EXPANSION JOINTS IN THE ROADWAY FACES AND TOPS OF CURBS AND SIDEWALKS SHALL BE ROUNDED TO A ¼" RADIUS WITH A FINISHING STONE OR TOOL UNLESS OTHERWISE REQUIRED ON PLANS.

DOWELS:

DOWELS WHEN INDICATED ON PLANS AS FOR CULVERT EXTENSIONS, SHALL BE EMBEDDED AT LEAST 12" INTO THE OLD CONCRETE AND GROUTED INTO PLACE WITH 1:2 CEMENT MORTAR.

ALLOWANCE FOR DEAD LOAD DEFLECTION, SETTLEMENT, ETC. IN CASTING SUPERSTRUCTURES:

BRIDGES SHALL BE BUILT ON THE GRADE OR VERTICAL CURVE SHOWN ON PLANS. SLABS, CURBS AND PARAPETS SHALL CONFORM TO THE GRADE OR CURVE.

ALL DIMENSIONS WHICH ARE GIVEN IN SECTION AND ARE AFFECTED BY DEAD LOAD DEFLECTIONS ARE DIMENSIONS AT CENTER LINE OF BEARING UNLESS OTHERWISE NOTED ON PLANS. IN SETTING FORMS FOR STEEL BEAM BRIDGES AND PRESTRESSED CONCRETE GIRDER BRIDGES, ADJUSTMENTS SHALL BE MADE DUE TO THE DEAD LOAD DEFLECTIONS FOR THE ELEVATIONS SHOWN. WHERE BLOCKS ARE SHOWN OVER BEAMS FOR BUILDING UP TO THE SLAB, THE VERTICAL DIMENSIONS OF THE BLOCKS SHALL BE ADJUSTED BETWEEN BEARINGS TO COMPENSATE FOR DEAD LOAD DEFLECTIONS, VERTICAL CURVE ORDINATE, AND ACTUAL BEAM CAMBER. WHERE BOTTOM OF SLAB IS IN LINE WITH BOTTOM OF TOP FLANGES, DEPTH OF SLAB BETWEEN BEARINGS SHALL BE ADJUSTED TO COMPENSATE FOR DEAD LOAD DEFLECTION, VERTICAL CURVE ORDINATE, AND ACTUAL BEAM CAMBER.

IN SETTING FALSEWORK AND FORMS FOR REINFORCED CONCRETE SPANS, AN ALLOWANCE SHALL BE MADE FOR DEAD LOAD DEFLECTIONS, SETTLEMENT OF FALSEWORK, AND PERMANENT CAMBER WHICH SHALL BE PROVIDED FOR IN ADDITION TO THE ELEVATIONS SHOWN. AFTER REMOVAL OF THE FALSEWORK, THE FINISHED STRUCTURES SHALL CONFORM TO THE PROFILE AND ELEVATIONS SHOWN ON THE PLANS AND CONSTRUCTION ELEVATIONS FURNISHED BY THE ENGINEER.

DETAILED DRAWINGS FOR FALSEWORK OR FORMS FOR BRIDGE SUPERSTRUCTURE AND ANY STRUCTURE OR PARTS OF A STRUCTURE AS NOTED ON THE PLANS SHALL BE SUBMITTED TO THE ENGINEER FOR APPROVAL BEFORE CONSTRUCTION OF THE FALSEWORK OR FORMS IS STARTED.

REINFORCING STEEL:

ALL REINFORCING STEEL SHALL BE DEFORMED. DIMENSIONS RELATIVE TO PLACEMENT OF REINFORCING ARE TO CENTERS OF BARS UNLESS OTHERWISE INDICATED IN THE PLANS. DIMENSIONS ON BAR DETAILS ARE TO CENTERS OF BARS OR ARE OUT TO OUT AS INDICATED ON PLANS.

WIRE BAR SUPPORTS SHALL BE PROVIDED FOR REINFORCING STEEL WHERE INDICATED ON THE PLANS. WHEN BAR SUPPORT PIECES ARE PLACED IN CONTINUOUS LINES, THEY SHALL BE SO PLACED THAT THE ENDS OF THE SUPPORTING WIRES SHALL BE LAPPED TO LOCK LEGS ON ADJOINING PIECES.

STRUCTURAL STEEL:

AT THE CONTRACTOR'S OPTION, HE MAY SUBSTITUTE ⅞" Ø SHEAR STUDS FOR THE ¾" Ø STUDS SPECIFIED ON THE PLANS. THIS SUBSTITUTION SHALL BE MADE AT THE RATE OF 3 - ⅞" Ø STUDS FOR 4 - ¾" Ø STUDS, AND STUD SPACING CHANGES SHALL BE MADE AS NECESSARY TO PROVIDE THE SAME EQUIVALENT NUMBER OF ⅞" Ø STUDS ALONG THE BEAM AS SHOWN FOR ¾" Ø STUDS BASED ON THE RATIO OF 3 - ⅞" Ø STUDS FOR 4 - ¾" Ø STUDS. STUDS OF THE LENGTH SPECIFIED ON THE PLANS MUST BE PROVIDED. THE MAXIMUM SPACING SHALL BE 2'-0".

EXCEPT AT THE INTERIOR SUPPORTS OF CONTINUOUS BEAMS WHERE THE COVER PLATE IS IN CONTACT WITH BEARING PLATE, THE CONTRACTOR MAY, AT HIS OPTION, SUBSTITUTE FOR THE COVER PLATES DESIGNATED ON THE PLANS COVER PLATES OF THE EQUIVALENT AREA PROVIDED THESE PLATES ARE AT LEAST 5/16" IN THICKNESS AND DO NOT EXCEED A WIDTH EQUAL TO THE FLANGE WIDTH LESS 2" OR A THICKNESS EQUAL TO 2 TIMES THE FLANGE THICKNESS. THE SIZE OF FILLET WELDS SHALL CONFORM TO THE REQUIREMENTS OF THE CURRENT ANSI/AASHTO/AWS "BRIDGE WELDING CODE". ELECTROSLAG WELDING WILL NOT BE PERMITTED.

WITH THE SOLE EXCEPTION OF EDGES AT SURFACES WHICH BEAR ON OTHER SURFACES, ALL SHARP EDGES AND ENDS OF SHAPES AND PLATES SHALL BE SLIGHTLY ROUNDED BY SUITABLE MEANS TO A RADIUS OF APPROXIMATELY 1/16 INCH OR EQUIVALENT FLAT SURFACE AT A SUITABLE ANGLE PRIOR TO PAINTING, GALVANIZING, OR METALLIZING.

HANDRAILS AND POSTS:

METAL STANDARDS AND FACES OF THE CONCRETE END POSTS FOR THE METAL RAIL SHALL BE SET NORMAL TO THE GRADE OF THE CURB, UNLESS OTHERWISE SHOWN ON PLANS. THE METAL RAIL AND TOPS OF CONCRETE POSTS USED WITH THE ALUMINUM RAIL SHALL BE BUILT PARALLEL TO THE GRADE OF THE CURB.

METAL HANDRAILS SHALL BE IN ACCORDANCE WITH THE PLANS. RAILS SHALL BE AS MANUFACTURED FOR BRIDGE RAILING. CASTINGS SHALL BE OF A UNIFORM APPEARANCE. FINS AND OTHER DEFORMATIONS RESULTING FROM CASTING OR OTHERWISE SHALL BE REMOVED IN A MANNER SO THAT A UNIFORM COLORING OF THE COMPLETED CASTING SHALL BE OBTAINED. CASTINGS WITH DISCOLORATIONS OR OF NON-UNIFORM COLORING WILL NOT BE ACCEPTED. CERTIFIED MILL REPORTS ARE REQUIRED FOR METAL RAILS AND POSTS.

SPECIAL NOTES:

GENERALLY, IN CASE OF DISCREPANCY, THIS STANDARD SHEET OF NOTES SHALL GOVERN OVER THE SPECIFICATIONS, BUT THE REMAINDER OF THE PLANS SHALL GOVERN OVER NOTES HEREON, AND SPECIAL PROVISIONS SHALL GOVERN OVER ALL. SEE SPECIFICATIONS ARTICLE 105-4.

ENGLISH

JANUARY, 1990